Ten Engineering Projects

Portfolio review, interactive showcases, native FeedBack and cost scenarios

25 November 2026 · reviewed showcases



ARGON

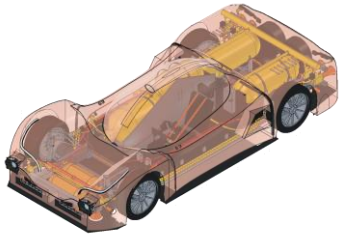

IMPULSE



VEKTOR E-26



Tesla Roadster Rocket



LLTV



C400P2

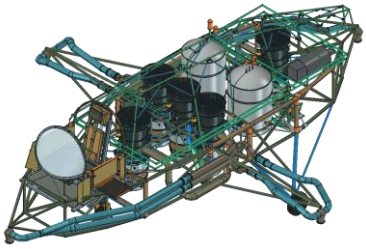

SG1262

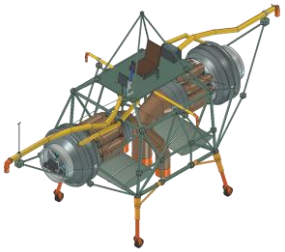

XJ314



Ludion 002

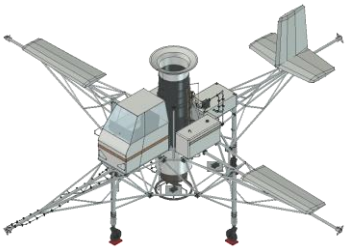

TURBOLET

Contents

01 Evidence Across the Ten Projects 6
02 Interactive Catalog and Current Showcases 7
03 Current State of the Showcases 9
04 Portfolio Cost Estimate and Target Prices 10
05 Portfolio Technical and Economic Parameters 11
06 CAD Verification and FeedBack Release 12
07 ARGON 13
08 ARGON+ · Technical and Economic Parameters 15
09 Native R07 CAD Verification 16
10 ARGON · Six Reaction Consoles 18
11 ARGON · Inside a Reaction Console 20
12 ARGON · Lower A/B Console Section 24
13 ARGON · LOW and HIGH Side Outlet Sections 26
14 ARGON · Console Operation by Flight Phase 27
15 ARGON · Forces and Nozzle Control 29
16 ARGON · Airflow and Skirt 31
17 ARGON · Frame, Safety Cell and Running Gear 34
18 ARGON · Acceleration to Touchdown 37
19 ARGON · Reading the Showcase 39
20 ARGON · Results and Conclusions 42
21 ARGON · Development History 43
22 ARGON · Archived Results and Limitations 55
23 ARGON · Data and Method 56
24 ARGON · Evidence Review 57
25 Road Vehicles and the Roadster Reconstruction 58
26 Six Historical Reconstructions 59
27 Airflow, Thrust and Control 60
28 Forces, Thrust and Acceleration 64
29 Design Principles in AI-CAD TextToCAD 66
30 Landing and Suspension Behaviour 68
31 IMPULSE 69
32 IMPULSE · Technical and Economic Parameters 70
33 IMPULSE · CAD Views and Datums 71
34 IMPULSE · Layout and Assemblies 72
35 IMPULSE · Airflow and Control 73
36 IMPULSE · How It Works 74
37 IMPULSE · Showcase Screen 75
38 IMPULSE · Forces and Motion 76
39 IMPULSE · Landing Gear and Load Paths 77
40 IMPULSE · Verification and Evidence 78

41 IMPULSE · Reading the Showcase 79
42 IMPULSE · Development History 81
43 IMPULSE · Results and Limitations 82
44 IMPULSE · Data and Method 83
45 IMPULSE · Evidence Review 84
46 VEKTOR E-26 85
47 VEKTOR E-26 · Technical and Economic Parameters 86
48 VEKTOR E-26 · CAD Views and Datums 87
49 VEKTOR E-26 · Layout and Assemblies 88
50 VEKTOR E-26 · Airflow and Control 89
51 VEKTOR E-26 · How It Works 90
52 VEKTOR E-26 · Showcase Screen 91
53 VEKTOR E-26 · Forces and Motion 92
54 VEKTOR E-26 · Landing Gear and Load Paths 93
55 VEKTOR E-26 · Verification and Evidence 94
56 VEKTOR E-26 · Reading the Showcase 95
57 VEKTOR E-26 · Development History 97
58 VEKTOR E-26 · Results and Limitations 98
59 VEKTOR E-26 · Data and Method 99
60 VEKTOR E-26 · Evidence Review 100
61 Tesla Roadster Rocket 101
62 Tesla Roadster Rocket · Technical and Economic Parameters 102
63 Tesla Roadster Rocket · CAD Views and Datums 103
64 Tesla Roadster Rocket · Layout and Assemblies 104
65 Tesla Roadster Rocket · Airflow and Control 105
66 Tesla Roadster Rocket · How It Works 106
67 Tesla Roadster Rocket · Showcase Screen 107
68 Tesla Roadster Rocket · Forces and Motion 108
69 Tesla Roadster Rocket · Landing Gear and Load Paths 109
70 Tesla Roadster Rocket · Verification and Evidence 110
71 Tesla Roadster Rocket · Reading the Showcase 111
72 Tesla Roadster Rocket · Development History 113
73 Tesla Roadster Rocket · Results and Limitations 114
74 Tesla Roadster Rocket · Data and Method 115
75 Tesla Roadster Rocket · Evidence Review 116
76 LLTV 117
77 LLTV · Technical and Economic Parameters 118
78 LLTV · CAD Views and Datums 119
79 LLTV · Layout and Assemblies 120
80 LLTV · Airflow and Control 121
81 LLTV · How It Works 122
82 LLTV · Showcase Screen 123
83 LLTV · Forces and Motion 124
84 LLTV · Landing Gear and Load Paths 125
85 LLTV · Verification and Evidence 126

86 LLTV · Reading the Showcase 127
87 LLTV · Development History 129
88 LLTV · Results and Limitations 130
89 LLTV · Data and Method 131
90 LLTV · Evidence Review 132
91 C400P2 133
92 C.400 P.2 · Technical and Economic Parameters 134
93 C.400 P.2 · CAD Views and Datums 135
94 C.400 P.2 · Layout and Assemblies 136
95 C.400 P.2 · Airflow and Control 137
96 C.400 P.2 · How It Works 138
97 C.400 P.2 · Showcase Screen 139
98 C.400 P.2 · Forces and Motion 140
99 C.400 P.2 · Landing Gear and Load Paths 141
100 C.400 P.2 · Verification and Evidence 142
101 C.400 P.2 · Reading the Showcase 143
102 C.400 P.2 · Development History 145
103 C.400 P.2 · Results and Limitations 146
104 C.400 P.2 · Data and Method 147
105 C.400 P.2 · Evidence Review 148
106 SG1262 149
107 SG1262 · Technical and Economic Parameters 150
108 SG1262 · CAD Views and Datums 151
109 SG1262 · Layout and Assemblies 152
110 SG1262 · Airflow and Control 153
111 SG1262 · How It Works 154
112 SG1262 · Showcase Screen 155
113 SG1262 · Forces and Motion 156
114 SG1262 · Landing Gear and Load Paths 157
115 SG1262 · Verification and Evidence 158
116 SG1262 · Reading the Showcase 159
117 SG1262 · Development History 161
118 SG1262 · Results and Limitations 162
119 SG1262 · Data and Method 163
120 SG1262 · Evidence Review 164
121 XJ314 165
122 XJ314 · Technical and Economic Parameters 166
123 XJ314 · CAD Views and Datums 167
124 XJ314 · Layout and Assemblies 168
125 XJ314 · Airflow and Control 169
126 XJ314 · How It Works 170
127 XJ314 · Showcase Screen 171
128 XJ314 · Forces and Motion 172
129 XJ314 · Landing Gear and Load Paths 173
130 XJ314 · Verification and Evidence 174

131 XJ314 · Reading the Showcase ... 175
132 XJ314 · Development History ... 177
133 XJ314 · Results and Limitations ... 178
134 XJ314 · Data and Method ... 179
135 XJ314 · Evidence Review ... 180
136 Ludion 002 ... 181
137 Ludion 002 · Technical and Economic Parameters ... 182
138 Ludion 002 · CAD Views and Datums ... 183
139 Ludion 002 · Layout and Assemblies ... 184
140 Ludion 002 · Airflow and Control ... 186
141 Ludion 002 · How It Works ... 187
142 Ludion 002 · Showcase Screen ... 188
143 Ludion 002 · Forces and Motion ... 189
144 Ludion 002 · Landing Gear and Load Paths ... 190
145 Ludion 002 · Verification and Evidence ... 191
146 Ludion 002 · Reading the Showcase ... 192
147 Ludion 002 · Development History ... 194
148 Ludion 002 · Results and Limitations ... 195
149 Ludion 002 · Data and Method ... 196
150 Ludion 002 · Evidence Review ... 197
151 TURBOLET ... 198
152 TURBOLET · Technical and Economic Parameters ... 199
153 TURBOLET · CAD Views and Datums ... 200
154 TURBOLET · Layout and Assemblies ... 201
155 TURBOLET · Airflow and Control ... 203
156 TURBOLET · How It Works ... 204
157 TURBOLET · Showcase Screen ... 205
158 TURBOLET · Forces and Motion ... 206
159 TURBOLET · Landing Gear and Load Paths ... 207
160 TURBOLET · Verification and Evidence ... 208
161 TURBOLET · Reading the Showcase ... 209
162 TURBOLET · Development History ... 211
163 TURBOLET · Results and Limitations ... 212
164 TURBOLET · Data and Method ... 213
165 TURBOLET · Evidence Review ... 214
166 Comparable Results ... 215
167 Cost per Attempt and Programme Cost ... 216
168 Verification by Reopening in FreeCAD ... 217
169 Decision Sequence ... 218
170 Comparing Measurements ... 219
171 NASA and French C.400 Sources ... 220
172 Museum Records and Photographs ... 221
173 Coverage and Source Register ... 222

Evidence Across the Ten Projects

Conclusion for the leader

The report covers ten projects. ARGON remains central, the remaining nine received comparable sections about layout, threads, forces, supports and work with design displays.

Four automotive projects have reached optional technical specifications. There is no protocol in any of the four chats that would confirm the entire claimed program on the same physical machine.

IMPULSE offers to divide the ground machine and research stand. VEKTOR checked the service of cassettes, but its calculations of flight and landings diverge by weight. At the replica Roadster, the main series of 5 m remains on 0 of 4. ARGON offers a choice between two layouts after measurements.

Six reconstructions give results of another kind. You can check the file, local conjugation, calculation scenario or the connection of the part with the archive image. For example, STEP’s verification revealed a deviation in exactly one body of SG1262, and the new launch of the TURBOLLET reproduced the composition of the museum R5.

Boundary of the decision

For cars, the next common frontier is a agreed record for one composition and a measurement of critical restriction. For historical models, a source that links a controversial size or mode with a specific board and date.

Slice 19-24 November 2026 Moscow time. 272 moves of ten design chats and 8 moves of a separate chat of corporate identity. Each conclusion relates to the audit.

Interactive Catalog and Current Showcases

Slice on 25 November 2026

Updates for all ten projects have been checked. In each catalog, the point task mode is available. LLTV has added a landing route and a separate 3D repeat of 30 scripts is saved.

In the browser, the inputs of the showcases are checked. For LLTV, the R04 numerical route is re-replicated. The ARGON builds are represented by the saved versions of V1 and V2 R07.

Sources

Interactive catalog ARGON+

Checking the windows and replaying LLTV

Methods of route LLTV R04

FEedBack FineBack FineBack

Project	What is available in the picture of the showcase
IMPULSE	The single showcase includes an AWD/RWD synchronous 3D flight, a point-to-point flight, nine steps of the device and an atlas. The new review of RU/EN lasts 2:19. Voiceover is tied to demonstration footage and telemetry.
VEKTOR E-26	One set of RU/EN connects 26 R12E–R12I scenarios, an inspection of R12J, a point-to-point flight, an atlas and a library. When the R12I landing and the flight R12E shows, different calculated masses and countings are saved.
Roadster Rocket · C6I	In a single DEV48 player, two calculation records are compared by separation, first touchdown or start. Under the cursor, gas flow, wheel reactions, grouse velocity and available energy channels are visible. AIR DEV44 has a rack limit, N2 DEV26 has a speed limit. The N2 full-energy fields are open.
ARGON	Two saved V1 panel_fit and V2 rear_cover R07. CAD-atlas, comparison of R06 trajectories and point task mode are available. The native FCStd of both versions are reopened. Comments on exchange formats are given in FeedBack.
LLTV	Showcase R02 links CAD R4D.1, passport R01 and route R04. The library indexes 801 project files by category and status. The verified three-waypoint route takes 82.89 s from liftoff to first touchdown. LLTV library
C.400 P.2	Consolidated showcase links simulators, valves, Atar incision, video and reports. In a long calculated route, the reserve forecast leads to landing at point No. 3. Points 4-6 are passed. The comparative RR-H1 refers to the Roadster replica.
SG1262	In the single entry of H62 available 3D-flight, step-by-step lesson, positioning and catalog of materials. When returning from the lesson, the player saves the frame and angle. The catalog contains the atlas R02, CAD, STEP, FeedBack, telemetry and estimate.

Project	What is available in the picture of the showcase
XJ314	The single showcase RU/EN binds Hucknall, point-to-point flight, failure scenarios, F/R valves, slow landing and R11-G1 materials. On the overall scale, the reactions of each support and an equivalent move are calculated. The historic flight and the P1 digital outrages are signed separately.
Ludion 002	The overall showcase combines flight, a lesson of 12 steps, placing a target with the wind, comparison and library. When consolidating, the reading of the side displacement with a 3D player is corrected. In the calculation of the touch, the intersection of the plane with a reference point is separately noted, the physical contact of the racks by this result is not confirmed.
TURBOLET	The main appeared a 36-second review with the choice of language and the preservation of the position. Chapters lead to engine cut, manual flight, compared to the Roadster and the archive. The demonstration mode and open parameters save the DEMO and OPEN tags.

Current State of the Showcases

Russian and English entry points checked · 25 November 2026

98 entrances and modes of operating displays in Russian and English were checked. For LLTV, a three-point example in both versions is repeated. Pictures and graphs in chapters retain the audit in which they were obtained.

Project and release	Relevant content
IMPULSE · R06 · HP-A / HP-B	The passport includes the ten-cycle HP-A bench programme. Physical attempts remain at 0 of 10. Predicted readiness and bench results are recorded separately.
VEKTOR E-26 · CAD R12J · R13 calculation	The passport includes the unified R13 study. Model input mass at start is 1,516.5 kg and calculated airborne time is 1.428 s. The 3.42 m/s downward touchdown and structural constraints retain HOLD status.
Roadster Rocket · C6I / V1 · DEV52-S1	DEV52 adds the S1 AIR bench qualification programme. Three acceptance cycles are planned for each of T400 and T200. The published programme contains no bench results.
ARGON+ · CAD R07 · passport R11 · R12 study	R12 documents a 600 km road-range study at 90 km/h. The nominal calculations give 601.0 km for V1 and 617.8 km for V2 (120 kWh NMC). Battery packaging remains open. The report illustrations use the stable R07 configuration.
LLTV · NASA 952 · R4D.1 / route R04	The current showcase links to the R4D.1 passport and the route mode. The 2–6 waypoint route mode is separate from playback of the 30 recorded simulations.
C.400 P.2 · R6E5 · 4 100 / 5 250 mm	The technical passport links the C.400 P.2 archive and the R6E5 reconstruction. The Roadster R5/C6I column is retained as a separate comparison context.
SG1262 · H62 · R02 Atlas	The H62 showcase includes the passport, 3D flight, the systems walkthrough and the materials library. Unverified costs and physical aircraft data remain open.
XJ314 · R11 / R11-G1	The passport separates later RAE archival data from R11 calculations and the reinforced G1 configuration. The showcase retains landing and point-to-point modes.
Ludion 002 · CAD R10 · R13.2	The passport connects aircraft 002 historical records, the R10 CAD model and the R13.2 simulations. The demonstration budget covers digital and inert displays.
TURBOLET · R5 · Museum / Flight R1	The R5 showcase contains the museum model, a flight simulation and the TURBOLET passport. The Roadster passport is a separate comparison.

Sources

Verification record for all ten showcases

Instructions for updating the showcase

Portfolio Cost Estimate and Target Prices

Mln ₽ · benchmark for investment discussion

The line of estimates relates to a specific composition of the work. For historical projects, a demonstrator, exhibit or digital kit indicated in the line is often evaluated.

For each product there is a lower, basic and upper grades. All 30 scenarios and 108 lines of costs with the origin of amounts are available in the interactive catalog. The price is calculated for a series of three units, a margin of 25% and a commission of 5%.

Project and composition	Manufacture of unit	The target price of the unit
ARGON ARGON V2, research demonstrator	85,0 (40,0–170,0)	178,6 (83,3–366,7)
IMPULSE Road AWD, one configuration type	61,9 (26,9–105,9)	99,1 (43,1–174,5)
VEKTOR E-26 Ground-to-ground E-26, digital configuration	32,6 (18,0–63,1)	60,8 (31,4–123,5)
Roadster Rocket · C6I Local Roadster C6I, calculated demonstrator	278,7 (93,5–798,9)	1 302,2 (401,0–4 029,3)
LLTV Full-size research LLTV, analogue	284,6 (86,8–806,2)	962,2 (266,4–2 820,4)
C.400 P.2 Expositional P.400 P.2, base 5250 mm	11,8 (6,0–25,6)	21,7 (10,4–47,5)
SG1262 Full-size demonstration layout H62	35,0 (18,0–70,0)	58,6 (29,5–119,0)
XJ314 Reconstruction XJ314, two Nene	29,0 (11,7–70,6)	48,8 (19,1–122,3)
Ludion 002 Exposure Ludion, imitation of power unit	12,0 (5,0–30,0)	21,9 (9,0–53,3)
TURBOLET Exposed TURBOLET R5, museum layout	24,0 (11,0–52,0)	41,9 (19,0–91,4)

Empty cash inputs in the design materials are indicated by OPEN. In the presence of a training scenario, his amounts are marked with a DEMO. Excel shows the origin of inputs, preparation, first unit, the cost of the program and the influence of volume.

Sources

Open the Excel Ectoset

Monetary entrances and borders

GAO-20-195G · Cost Valuation Method

Details of all 30 scenarios (JSON)

Portfolio Technical and Economic Parameters

Ten passports · 25 November 2026

The Summary combines 734 lines from the design showcases. The record for each product shows units, conditions, status and source of each value.

Project	Base of the passport	Passport rows
ARGON+	R11 · V1 panel_fit / V2 rear_cover	105
IMPULSE	AWD / RWD · R06	116
VEKTOR E-26	CAD R12J · R13 calculation series	86
Roadster Rocket	C6I / Plan V1 · DEV51-AIR-STATION-01	73
LLTV	NASA 952 · R4D.1 / route mode R04	56
C.400 P.2	Archive C.400 P.2 / reconstruction R6E5	53
SG1262	H62	73
XJ314	Hucknall 1954 / RAE / R11 and G1	55
Ludion 002	CAD R10 / trajectories R13.2	57
TURBOLET	R5 Museum Assembly / Flight R1	60

The status of “CAD” refers to the geometry of digital assembly. The calculation and the scenario are valid at these entrances. The archival string refers to its configuration. “Indoor” means that the value requires confirmation.

Passport estimates retain currency, composition and conditions of their sources. The summary of the portfolio uses its own calculation of 30 scenarios. To compare costs, first compare the composition of the work, region, circulation and the volume of tests.

Sources

Passports of ten projects in the catalog

Full set of CSV parameters

Audits and benchmarks of sources

CAD Verification and FeedBack Release

TextToCAD · FreeCAD 1.1.4 · 24 November 2026

12 native packages for ten projects have been formed and checked. Two versions are included for ARGON and C.400 P.2. In 10 packages, the staff check did not note the comments to the composition and geometry.

A separate reopening of the saved FCStd is confirmed for 12 performances. For each checked SHA-256, the composition of mandatory files and frame of the first opening of the original copy. The related skeleton model is included in the materials of ARGON.

Product and Execution	Result
ARGON V2 rear_cover · R07	Saved FCStd is reopened. FeedBack partial. The exchange readiness check was noted by INVALID_GEOMETRY.
ARGON V1 panel_fit · R07	Saved FCStd is reopened. FeedBack partial. The exchange readiness check was noted by INVALID_GEOMETRY.
IMPULSE CAD audit of the Atlas	Materials are checked. Saved FCStd is reopened.
VEKTOR E-26 CAD audit of the Atlas	Materials are checked. Saved FCStd is reopened.
Roadster Rocket · C6I CAD audit of the Atlas	Materials are checked. Saved FCStd is reopened.
LLTV CAD audit of the Atlas	Materials are checked. Saved FCStd is reopened.
C.400 P.2 Chassis 5250 mm	Materials are checked. Saved FCStd is reopened.
C.400 P.2 Chassis 4100 mm	Materials are checked. Saved FCStd is reopened.
SG1262 CAD audit of the Atlas	Materials are checked. Saved FCStd is reopened.
XJ314 CAD audit of the Atlas	Materials are checked. Saved FCStd is reopened.
Ludion 002 CAD audit of the Atlas	Materials are checked. Saved FCStd is reopened.
TURBOLET CAD audit of the Atlas	Materials are checked. Saved FCStd is reopened.

Sources

Open FeedBack ten projects

Verification of native files, comments and checksums

ARGON

Central project · two layouts R07

Imagine a single-seater car that accelerates on tyres and briefly breaks away from the site. To the point of completion, wheeled drives are responsible for speed, and fans help press tires to the road. In the air, the tires stop changing the speed of the car. Compressed air coming out through the salon creates the forces for the transfer, rotation of the body and slowing down. After touch, the load returns to the tyres, suspension, frame and seat fastening.



Two native layouts P1.18 R07. On the left V1 panel_fit, right V2 rear_cover. The camera and scale are aligned, color and transparency are taken from CAD.

Why there are two versions in the project

Both assemblies use the common R01 reference skeleton with a 3,205 mm wheelbase, aligned datums and the A GUIv4 seating position for a driver 192 cm tall and 98 kg in mass. This gives the front and rear layouts a common coordinate system for comparison. Mass, inertia and service paths still differ.

Layout	What changes the machine to work
V1 panel_fit	On a general form, the upper pair of vessels P114 is released. An increased checkout supply gives more time to work assholes. High placement changes the centre of mass and inertia, and the upper service depends on the glass, the aperture and access to the fasteners.
V2 rear_cover	The food and the main vessel are arranged differently. The tested CAD configuration contains a regular charging track, and the removable cassette is shown in a separate hidden study. A smaller conditional stock makes V2 more sensitive to consumption and early cut-off.
Total GasR2	The rear GasR2 and its lodges are stored in both branches. Shown envelopers help to check the neighborhood of the nodes. Useful stock, containers and resources are checked with the passport data of the vessels.

What is the comparison

P1.18 sets the original pair, R01 - common bases, R06 - saved assembly of the window. The R07 updated the visible materials of the vessels in the preserved BRep and placements. Calculation on the geometry R06 s inherited inputs R3 remains a separate result. The early R52 RC4 research branch explains the origin of the consoles, and the final footage of this section is removed from V1/V2 R07.

Sources

F22 · F22 · R07 · Native files, coloring, visibility and SHA-256

F140 · F140 · D02 · Convolutional composition and mass V1/V2

F141 · F141 · Option technical task R1.1

Window and Native Verification

R07 retains two layouts on the R01 skeleton. CAD atlas shows them in one perspective. Showcase R06 connects the preserved trajectories with telemetry. FeedBack protocols confirm the reopening of both R07 assemblies.

Sources

Archive showcase R06 and R07

Point Task Mode

ARGON R07 · Native sets V1 and V2

ARGON+ · Technical and Economic Parameters

R11 · V1 panel_fit / V2 rear_cover

R11 - the estimated record for two layouts. Visual materials and the FCStd opening check in this chapter relate to R07. The R11 road range is obtained at a constant speed and given energy assumptions. Comparable measurement is open.

R12 documents a 600 km road-range study at 90 km/h. The nominal calculations give 601.0 km for V1 and 617.8 km for V2 (120 kWh NMC). Battery packaging remains open. The report illustrations use the stable R07 configuration.

Parameter	Value	Evidence
Wheelbase	3 205 mm · both versions	CAD
The mass of a fully refueled device in the calculation	V1 — 3 849,4 kg · V2 — 2 856,8 kg	Calculated
0–100 km/h · Electrical traction	V1 — 13,842 s · V2 — 8,772 s	Calculated
Power reserve at 90 km/h	V1 — 184,3 km · V2 — 209,8 km	Calculated
DC consumption at constant 90 km/h	V1 — 30,48 kWh/100 km · V2 — 26,76 kWh/100 km	Calculated
Air time R11 Kickflip	V1 — 2,842 s · V2 — 2,050 s	Calculated
Cost of an experimental device	– · both versions	Open
Operating value of one full drive	– · both versions	Open

In the full R11 passport there are 16 separate comparisons with the Roadster. The original configuration, purpose and calculation V1 / V2 are indicated for each row. The score depends on the comparability of the measurements.

Sources

Full passport in the catalog · 105 lines

Project showcase passport

Current showcase release

Native R07 CAD Verification

V1 panel_fit and V2 rear_cover

For both layouts, the reopening of the saved FCStd in FreeCAD 1.1.4 is confirmed. Assemblies use a common R01 skeleton.

Layout	Objects in FCStd	Result
V1 panel_fit	6 579	Re-opening confirmed. FeedBack partial.
V2 rear_cover	6 477	Re-opening confirmed. FeedBack partial.

In both assemblies, the staff check noted INVALID_GEOMETRY when assessing the readiness of the exchange. The status of the partial FeedBack refers to this issue. The footage below shows the saved R07 builds.

Sources

ARGON R07 · Native sets V1 and V2

Verification of native files, comments and checksums

Native Personnel Protocol ARGON R07

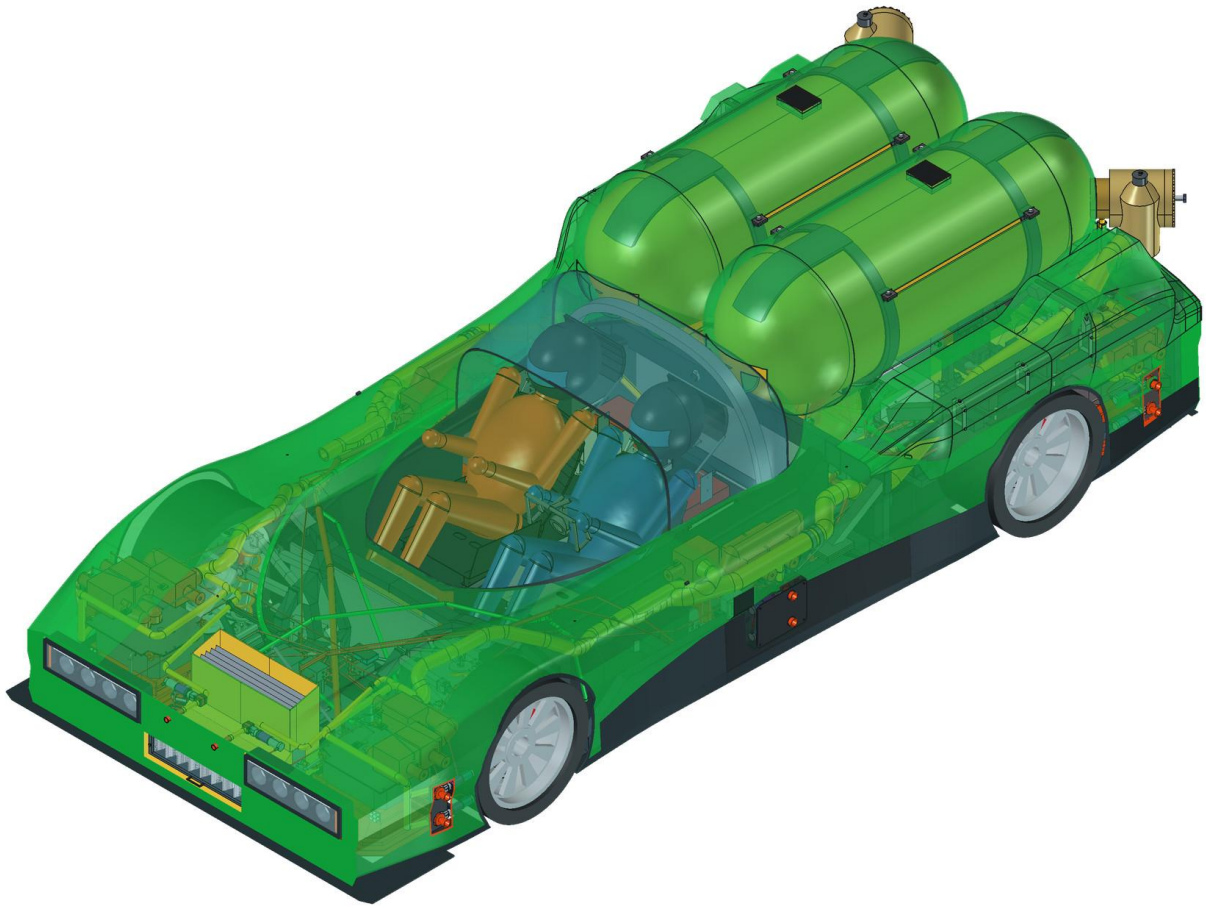

ARGON V1 panel_fit · R07. Front axonometry of native CAD assembly. Color and transparency are saved from FreeCAD.

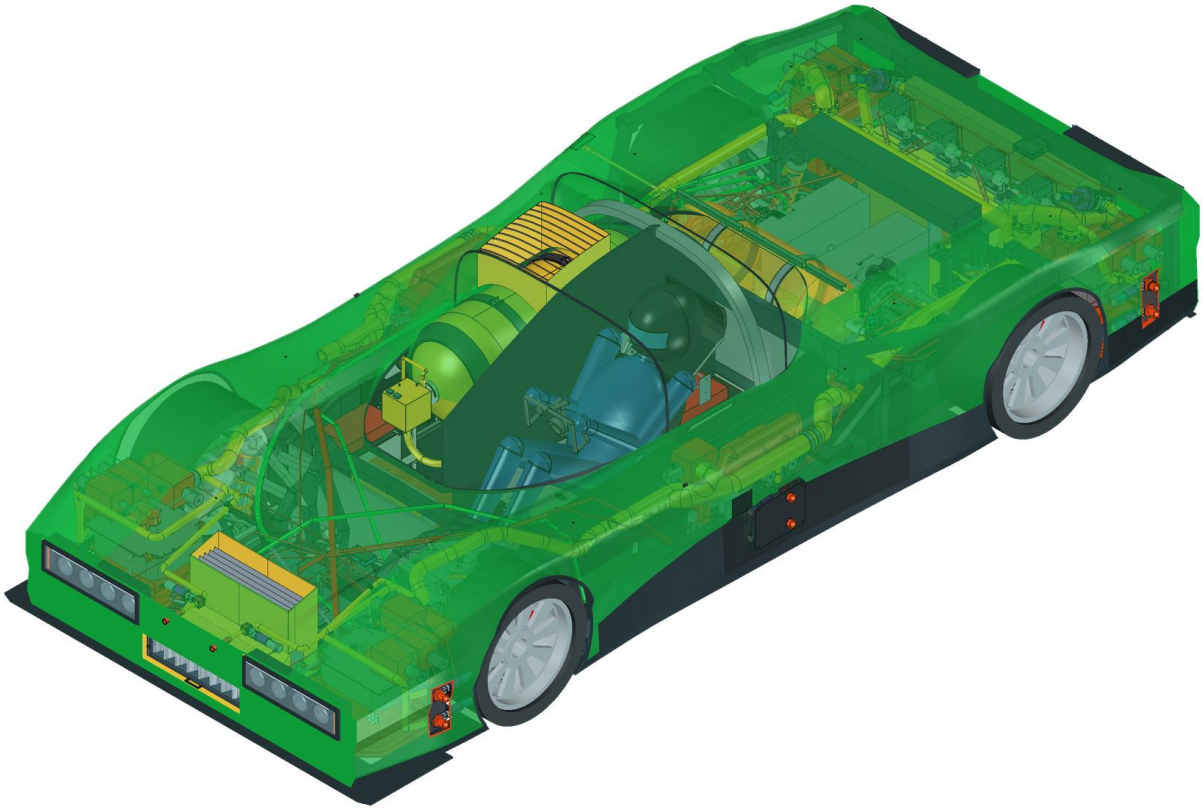

ARGON V2 rear_cover · R07. Front axonometry of native CAD assembly. Color and transparency are saved from FreeCAD.

ARGON · Six Reaction Consoles

Map FL, FR, ML, MR, RL and RR

A jet console is an on-board design module that binds the nozzle to the machine. Six installation locations form three pairs along the body. In native frames, the body, gas tanks and extra units are hidden so that all six consoles are visible. The wheels and the driver are left as landmarks.

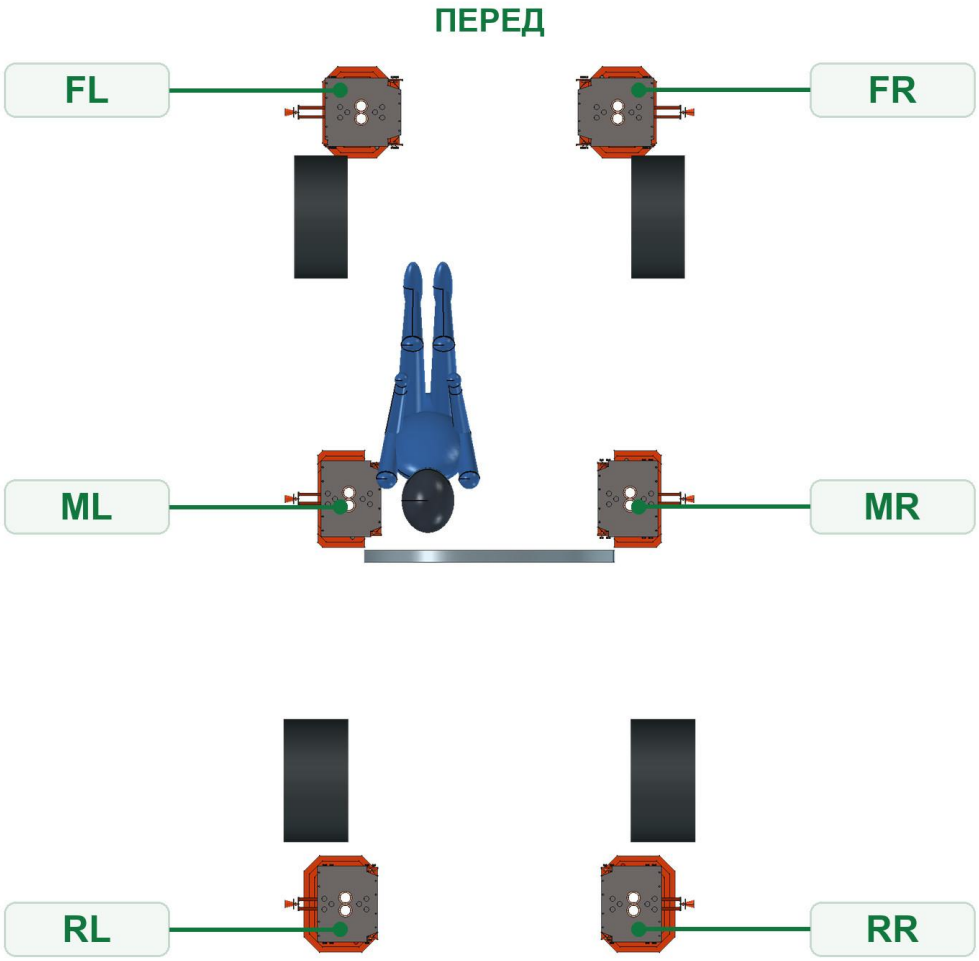

R07 V2 from above. In front of the car is directed upwards. The codes show the real mounting positions in the R01 system.

Couple	What gives the location
FL / FR · front	The front left and right modules are spread on the sides. The transverse reaction is applied in front of the centre of mass and gives a noticeable moment in the course.
ML / MR · average	Closer to the longitudinal area of the center of the car. With a side team, this pair in the project model gives a less pronounced moment of ying. The actual shoulder depends on the center of the mass of the current load.
RL / RR · Rear	The rear left and right modules are attached to the center of the masses. With the same side of the reaction, the contribution to the yaraking changes the sign relative to the front pair.

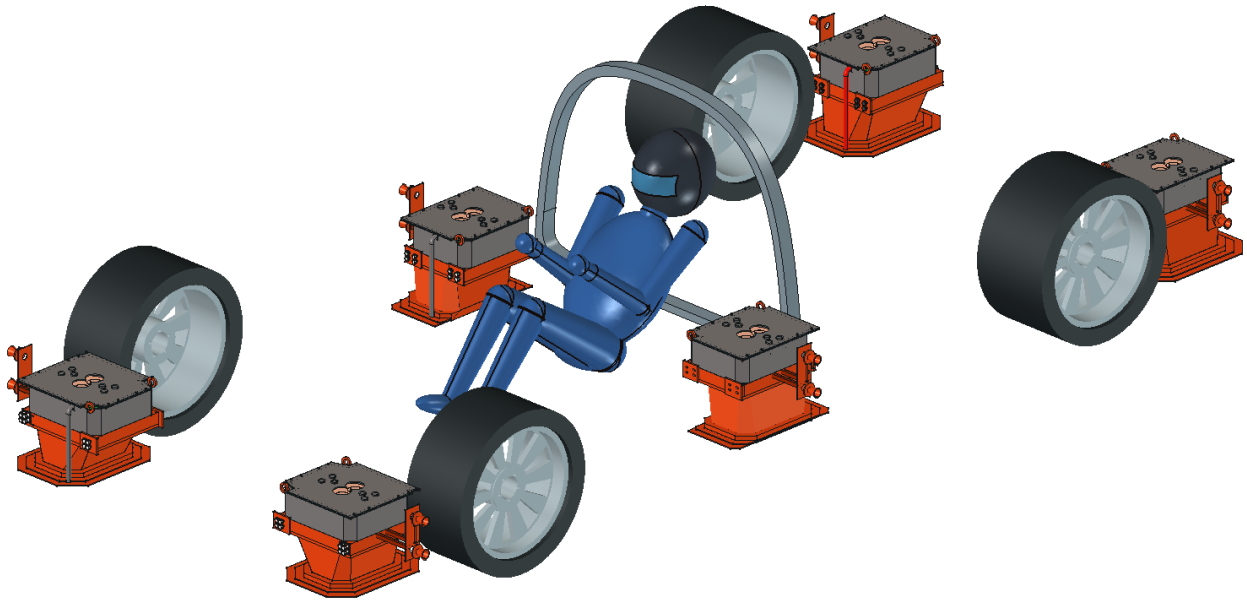

Installation axonometry R07 V2. You can see the installation buildings of the consoles and individual on-board channels.

The letters F, M and R in the first sign indicate the front, middle and rear positions, L and R in the second - left and right sides. In CAD X across, Y along, Z up. The positioning player uses custom x to the left, s forward and z up. When comparing the coordinates, you need to check the sign and the beginning of the axis.

The inspection of the saved models found the AMI case, six fixed forks and twelve side exits in each R07. A number of objects described bendage collectors and valves. Their visibility and the presence of geometry does not determine the bandwidth or confirmed composition of the equipment.

Sources

F142 · R07 · Native frame protocol and list of objects

F143 · Early RCS R2 · Origin of six modules and boundaries of the model

ARGON · Inside a Reaction Console

Installation cassette, lower pair and on-board exits

The project material uses the term console for two related groups. A separate assembly atlas shows the housing with its fork and lower A/B pair. The R07 installation model shows the LOW/HIGH side outlets next to it. The lower and side pairs act in different directions and are represented separately in the positioning simulator.

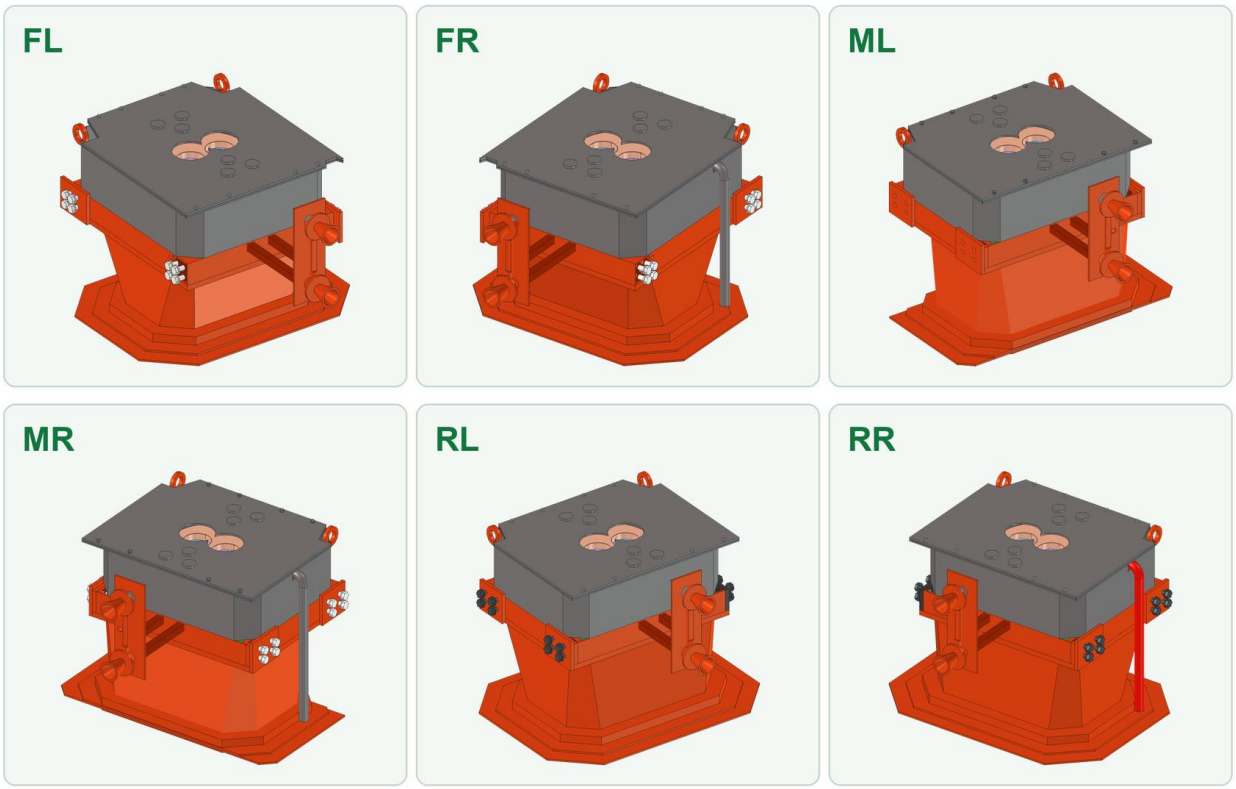

Six mounting consoles R07 V2. Removed separately without neighboring nodes. Geometry and color are native, the scale is changed for readability.

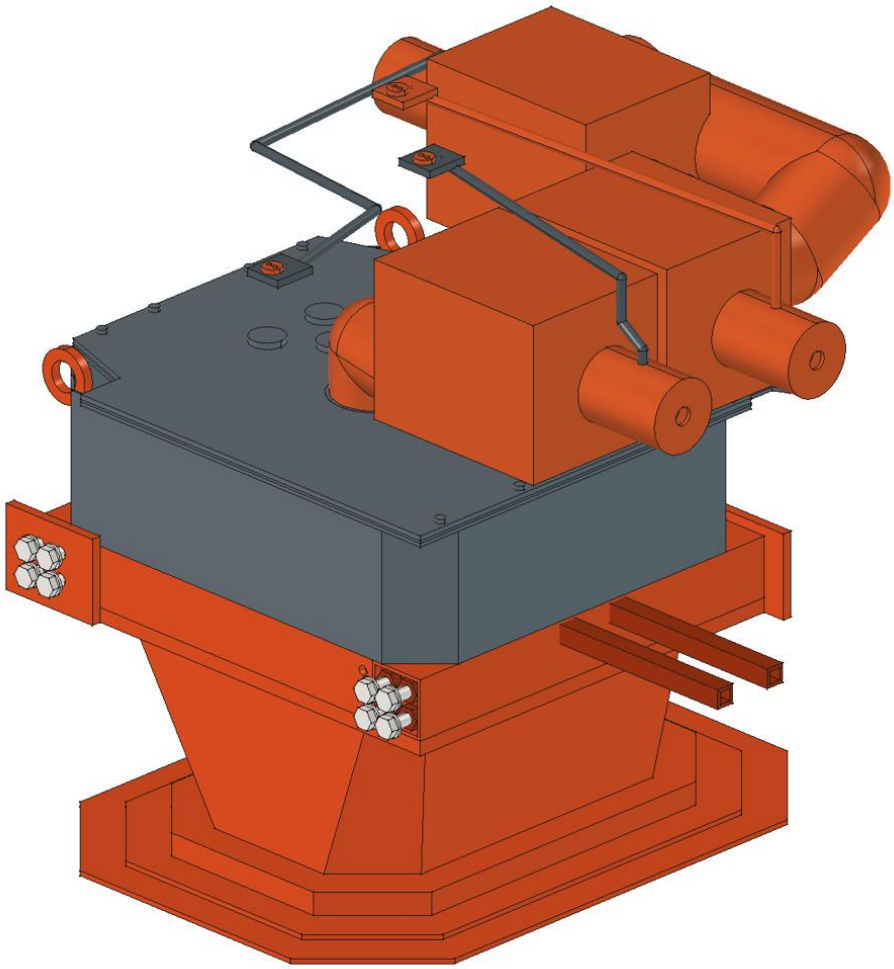

Insulated custom CAD view console with lower nozzle A/B. The source is the presentation model V1 of November 15.

How to read nodes on a sprawling form

Knot	Purpose and communication
Carrying part	Installation cassette, guides, housing, lid and flanges divide the path of reaction to the frame and the service route. The fixed plug serves as an installation link. Fastening tolerances and loads are required to be confirmed for the selected frame and cocoon.
Orientation and neutrality	Rings of tanga and roll, axles, sheers, stopers and fixtures give mechanical connections. In the shown first break, the node is fixed in neutral. Animation reveals the layout and conditional provisions.
Pressure Entrance	The main compartment unit and collector are brought by the air to the dosing branches. Valve elements set the available flow, and the nozzle deflects the pulse of gas outward. The cut-off makes the branch unavailable, even if the regulator requests force.
Lower pair A/B	In the native large plane, the holder, the output of the sleeves and the end seals of two nosole are distinguishable. With a downward exhaust, the body receives a reaction up.
The LOW/HIGH Side Couple	Two side exits at different levels. The same direction of the reaction gives a transverse force. The different height of the action line changes the contribution to the tilt relative to the center of the masses.

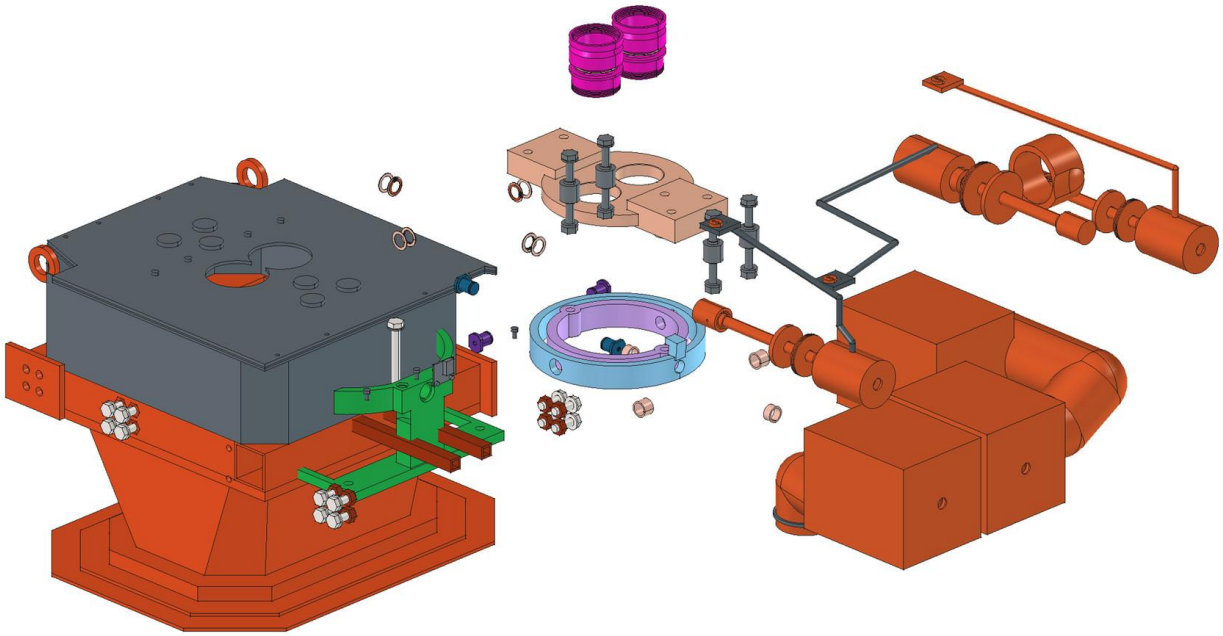

Navigation of the showcase V1. The body, mechanical connections and the nozzle vapor are spaced to read the composition.

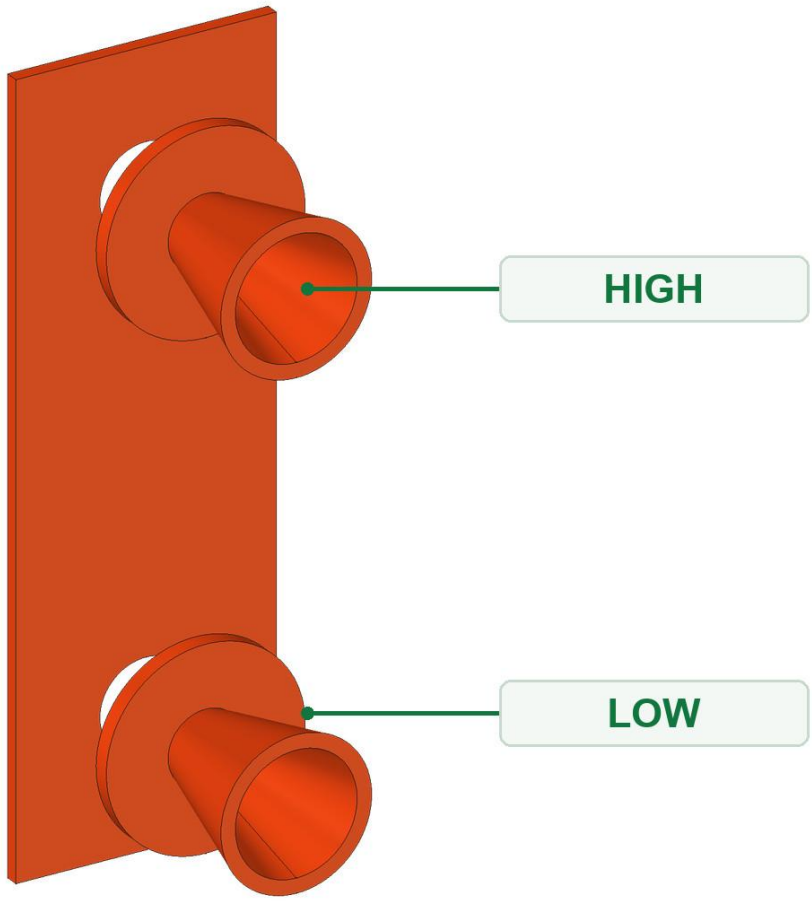

Native appearance of the output part of the front left module FL in R07 V2. Showing two sides, flanges and media interface.

In a separate showcase kit for the console, 108 presentation details are recorded. This number covers the components of the insulated node and pressure part in a given set. When evaluating six modules, the mounting statement of a particular build is used, and not the work of 108 by six.

Sources

F144 · Manifesto 108 parts and functional groups

F145 · Origin of native frames and dispersal

F146 · Showcase of systems · interactive console

ARGON · Lower A/B Console Section

Front left console FL · insulated showcase V1

In the bottom console, one serving is branched into two controlled outputs. On the first section, dosing nodes and pressure collector are visible. On the second plane passes through both lower nozzles. Blue arrows show the sequence of serving and exit of jets, green - a reaction to the body.

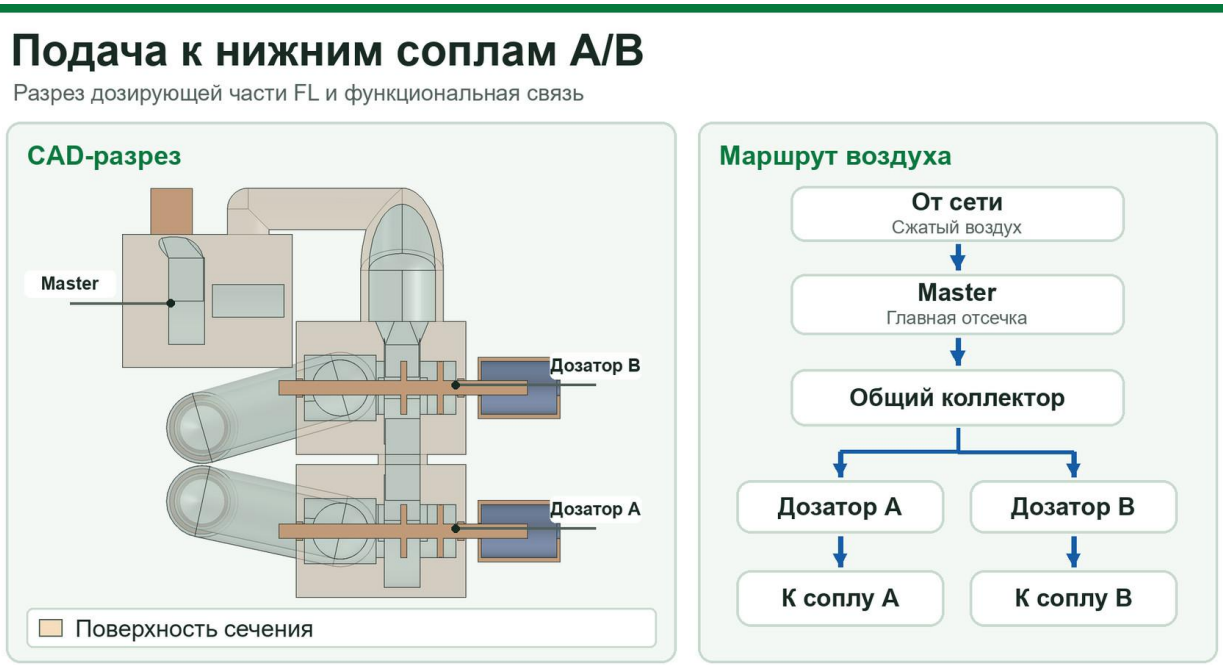

Синие стрелки связывают функции. Форма канала зависит от его CAD-геометрии.

Cutting the pressure part of the front left console FL. The color is the cross-sectional surfaces. The blue route generalizes the sequence of submission according to the functional circuit of the showcase.

From entry to fork

Compressed air comes from the common network. The main compartment valve Master allows the supply to the general cavity before the dispensers. If the Master is open and the A and B dosiposes are closed, the source can nourish the cavity to the dosing, while the schema does not show a stable release through the nozzles. Filling the cavity and leakage in this view are not calculated.

Each dispenser controls its branch. When opening A, the flow goes to the nozzle A, when opening B - to B. Each branch shows the dosing place, the outlet sleeve and the soaking seal. The curriculum does not specify the form of the channel between the sections and the position of the shutter in a particular frame.

Нижние сопла A и B

Сечение через обе оси · передняя левая консоль FL

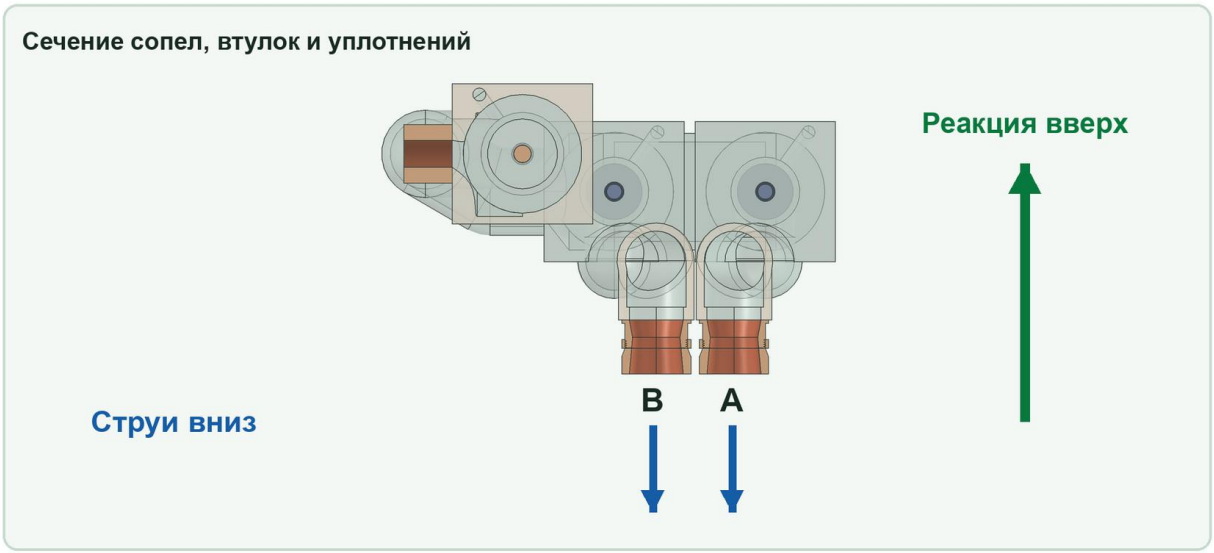

Показан нейтральный узел. Стрелки обозначают направления реакций.

Dissection through the axes of both lower nosole FL nospels. Labels A and B are tied to native names. The blue stream is directed downwards. The green arrow shows the reaction up to the node.

How to read two jets

With close commands, reactions A and B develop. If one branch works stronger, the resulting shifts, and an additional moment appears relative to the center of the masses. To assess the roll and tangahead, the strength of all front, middle, rear, left and right exits, as well as the current alignment, are important. Cardan and clamps in this example are shown in neutral.

Sources

F157 · Protocol of native incisions and images

F158 · System Showcase · Master and Meter A/B functional states

F144 · Native names, parts and composition of the showcase console

ARGON · LOW and HIGH Side Outlet Sections

Front left console FL · mounting model P1.18 R07 V2

LOW and HIGH - the lower and upper outputs of one side position. In the hull axes of the FL, both jets are directed outwards, and the reaction acts inside. The difference in height changes the shoulder relative to the center of the masses, therefore, with the same direction of reaction, the contribution to the tilt may vary.

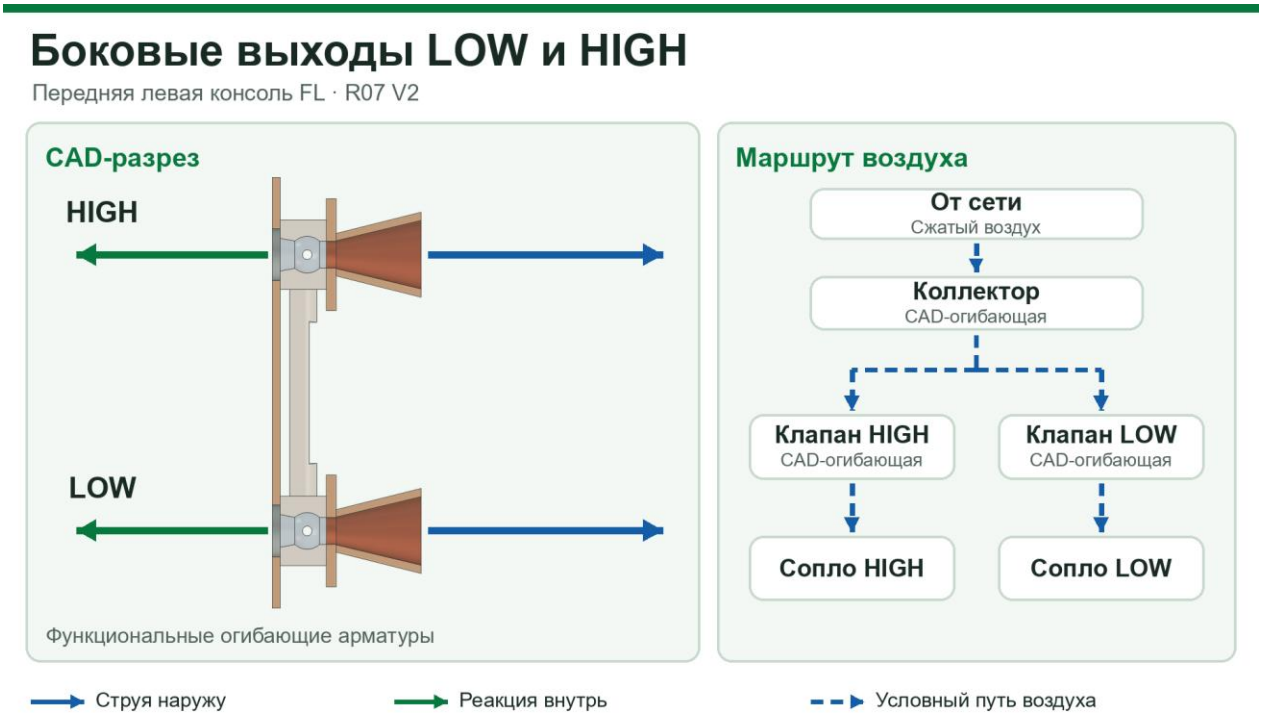

Installation section through both on-board exits FL. The withdrawal position is taken from R07. The collector and valves in CAD are given to the enrcerers. Their functional connection with the outputs is shown by the dotted line on the right.

What is visible in the cross-section

The section shows the outputs of LOW / HIGH, flanges, carrier and overall bodies of fitter. The route according to the scheme is read from the general network to the collector, then through the conditionally open valve of the selected level to its nozzle. The internal saddle, the smoothing of the shutter and the sections of the pipes between the interfaces from this model are not determined.

At the front exit, the action line passes in front of the center of the masses, at the rear - behind it. Therefore, the same side reaction can turn the nose in different directions. If the anterior and posterior reactions are parallel and face the same, they transfer with possible residual lysing. If they are opposite, there is a pair of forces with less resulting transfer. Equality of forces and compensation of moments depend on the supply, geometry and alignment.

Sources

F22 · R07 · native mounting audit and checksums

F148 · Side channels · geometric matrix and axes

F147 · R06 positioning Stand · Exit groups and limitations

ARGON · Console Operation by Flight Phase

Breakdown, reversal in the air and return to the supports

The same jet acts differently depending on the position of the body. While the car stands on wheels, part of the weight perceives the site. After separation, the vertical component of the reaction is important. Before landing, the task is added to it to level the body and extinguish the speed of the contact point.



Three conditional regimes. Blue color shows jets, green - the reaction of the nozzle to the body, the gray - weight, and the purple - the reaction of the site when touched. Arrows show directions.

Phase	Work of consoles and body movement
Excess	The downward jets A/B create a reaction upwards. The tyres are unloaded as the vertical effort grows. The front, middle and rear groups should create the required total reaction and hold the orientation. The moving device retains the speed gained by the wheels.
Turn	The difference between the front and stern changes the tangover, between the sides - the roll. LOW/HIGH front and rear pairs add a transverse reaction and yawpoint. When the body is tilted, the part of the lower traction acts along the site, and the available vertical share decreases.
Landing	Before touch, the lower jets help to brake the decrease, and the lateral - to correct the course and transverse displacement. After the first contact, support reactions appear. The tyre and suspension take the load, and the stability is evaluated by the reaction of all four wheels, the course of the racks and the absence of a second blow of the body.

Both on the turn and on braking, a common air reserve is used. For the sake of assessing the landing reserve in the window, you should simultaneously look at the gap, orientation, pressure and balance. The movement of the centre of mass and the rotation of the body jointly determine the vertical velocity of the part that relates to the site of the first.

In the saved series of Encore and Kickflip, the lower outputs perform the main turn and braking, the lateral adjust the cross-side position and course. This result relates to an archival model with accepted restrictions and stock. The availability of traction in a physical machine and stability on four wheels require separate data.

Sources

F147 · Positioning and total team balance

F149 · Encore and Kickflip · deposit of on-board nozzles in the calculated series

F141 · TZ R1.1 · orientation, point speed and following supports

ARGON · Forces and Nozzle Control

Direction of jet, shoulder and total supply

The nozzle releases air in one direction, and the body accelerates to the other. If the force passes by the center of the masses, the device also turns. With the same power, a more distant from the center of the action line gives a greater moment. In the air, the displacement and rotation are interconnected, so the regulator distributes teams between the groups.

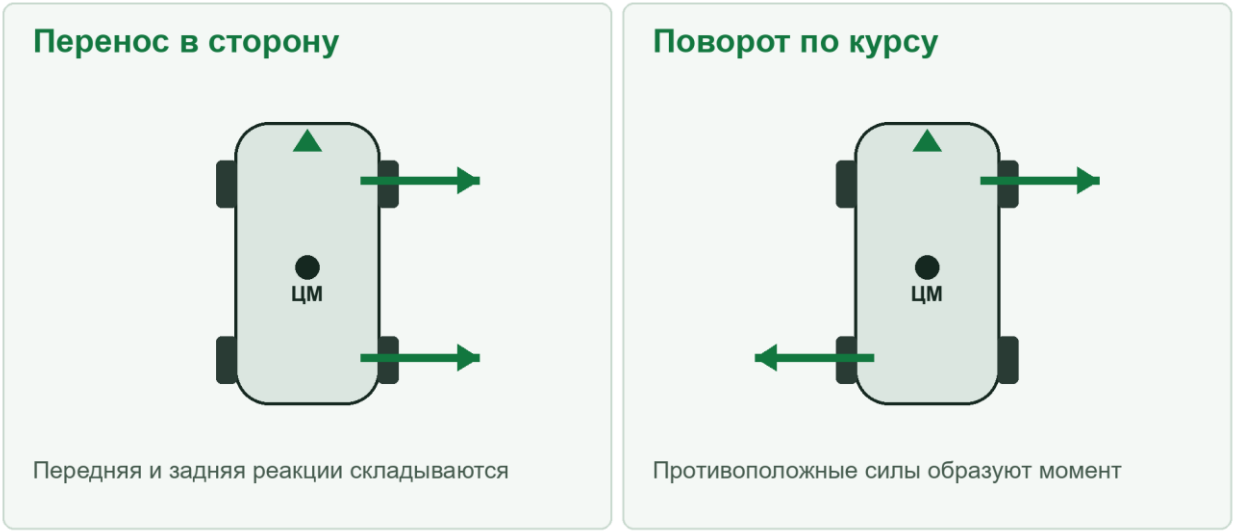

Scheduled diagrams of reaction of side pairs. The arrows show the strength on the body, the direction of the jet is the opposite. The length of the arrows is conditional.

Group R06	What sets in the model
12 lower	Create a lifting reaction in a normal orientation. The difference between left and right exits changes the roll, between the front and rear - tyanga. The inverted corps changes the projection of reaction to the world vertical.
12 side	Give a transverse force and a moment of yraking. The front and rear outputs allow you to choose the moment mark. Different output heights introduces a geometric connection with the roll.
4 Feeding	In the native set of the positioning stand, a longitudinal reaction forward is created. For reverse movement, the player uses body tilt and a component of lower thrust.

What Limits the Team

The total force is divided into vertical, longitudinal and transverse components. The moments are formed as r × F, where r goes from the center of the masses to the exit. The geometric matrix of the 12 side channels of the early branch has a rank of 3: it covers transverse strength, roll and lysing. At the same time, the availability of the desired sign and value in real mode depends on the limitations of the valves, total flow, delays and air residue.

Stock - how much air can be consumed before the cut-off. Serving - how many branches can skimp at the same time at this second. The increase in the reserve extends the availability of air, and the supply limit may still not allow a short peak of traction. The late braking team is particularly sensitive to this difference.

The positioning stand uses 28 outputs to the option. An earlier showcase of systems lists 30 functional outputs of its model. To analyze the number, next to the version and the page are indicated. There is no data on the same list of independent valves in these showcases.

Sources

F147 · Positioning R06 · outputs and assumptions

F148 · Geometric matrix of side channels R2

F149 · Maneuches and the role of on-board nozzles

ARGON · Airflow and Skirt

Ground pressing and reactive system

Two air principles work under the body. In the AIR tract, fans move the outside air through the camera and create a pressure difference for ground pressur. In the cold-gas system, a supply of vessels is consumed, and the directional jet acts on the body. The followers and CAD lists need to be read in this regard.

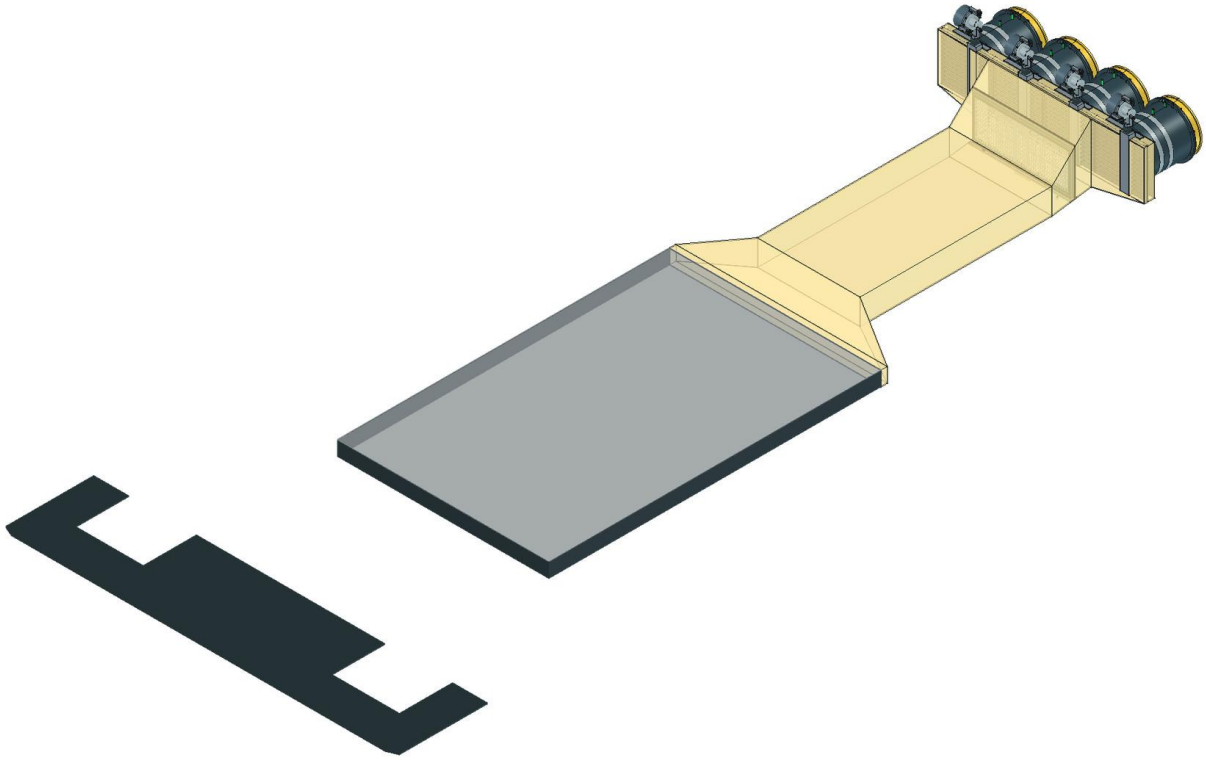

CAD-dining duct and pallet ARGON pallet. The entrances of fans and skirt contour are shown.

Knot	What he does
Camera and air tractor	The camera forms the area under the bottom. The air allows it to the fans. The pressure difference, acting on an effective area, gives a result of the press.
Continuous skirt	The lump limits the subserm outside. The growth of the gap, deformation or damage increases the leak. When in contact with the coating, a mechanical load on the edge and its fastening appears.
Filter R2	Rude and thin cassettes with seals. Selections before and after cassettes allow you to observe the general pressure drop. The difference also depends on the flow rate, so it is useful to compare it with a coordinated mode of fans.
Ventilators	The showcase shows the current axial node and a separate candidate R11. To assess the pressing, the characteristics of the flow and dilution of the entire assembly with leaks, filter and gap are needed.
Compressed air	Vessels, fittings, collectors, valves and exhaust branches. After the breakaway, it is the jet exits that enter the balance of traction. The downcamer connects with the road regime.



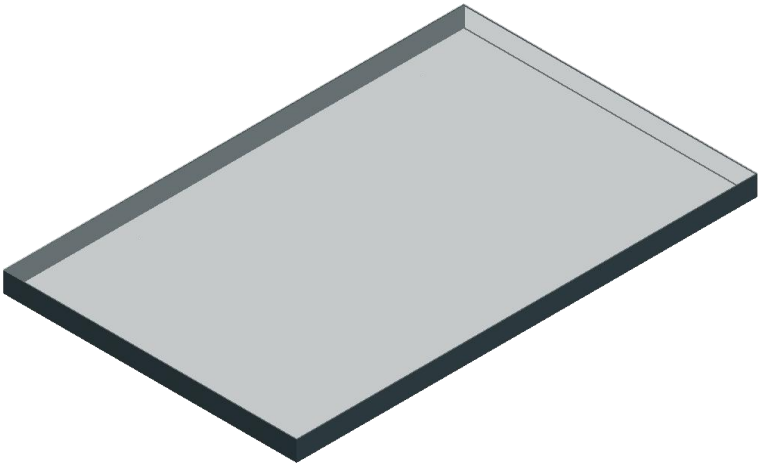

Native large type of edge and camera. In a separate demonstration, the course of the skirt 80 mm is chosen conditionally.

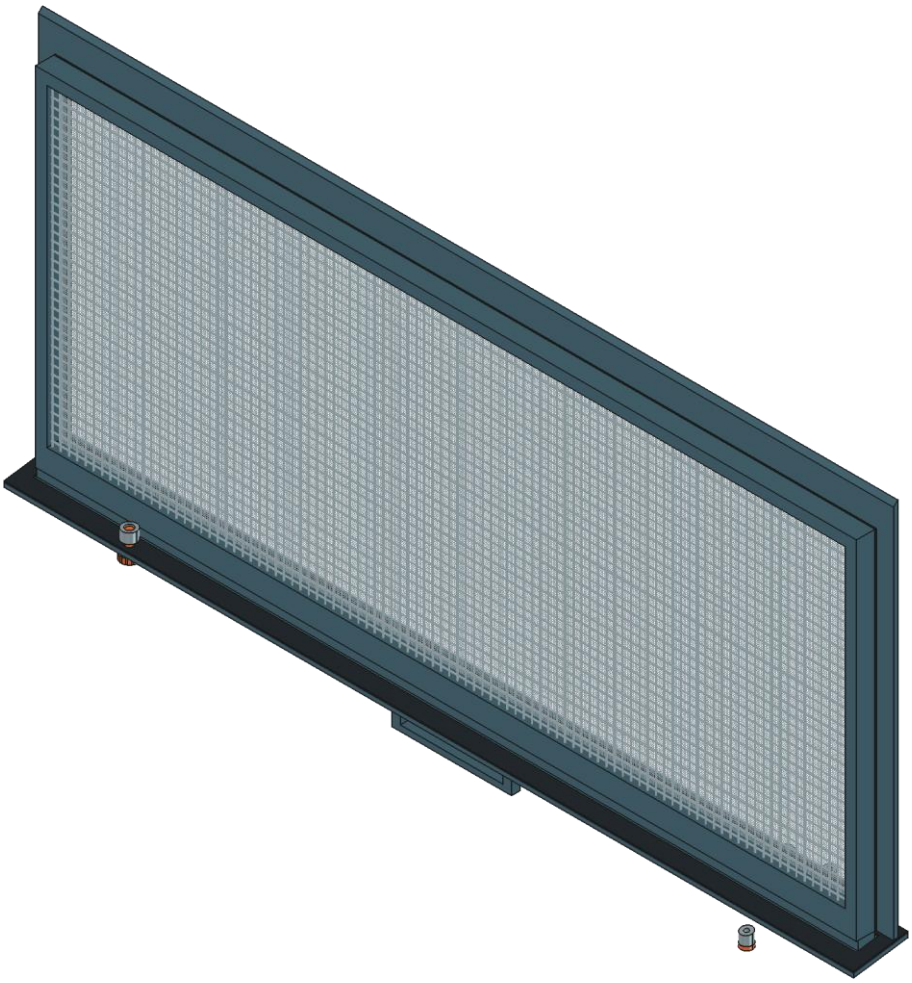

Cassette of the bottom from CAD. For R2, pressure sampling, sensor body and connection track are separately shown.

The showcase can be checked where the cassettes, edges and channels are placed. Real leaks on irregularities, pollution, wet filter resistance, sensor range and ski drive control remain measured tasks.

Sources

F116 · Filter R2 · composition, difference and boundaries of demonstration

F150 · AIR · nodes and functional bases of the showcase

ARGON · Frame, Safety Cell and Running Gear

Load transfer, maintenance, A GUIv4 and AI-CAD

ARGON has different systems converge in the same design. The reaction of the nozzle enters the frame through the cassette and the bracket. When touched, a similar chain is formed by a tyre, wheel, rack and frame supports. Cocoon and driver's seat set free zones for the operation of mechanics and maintenance.

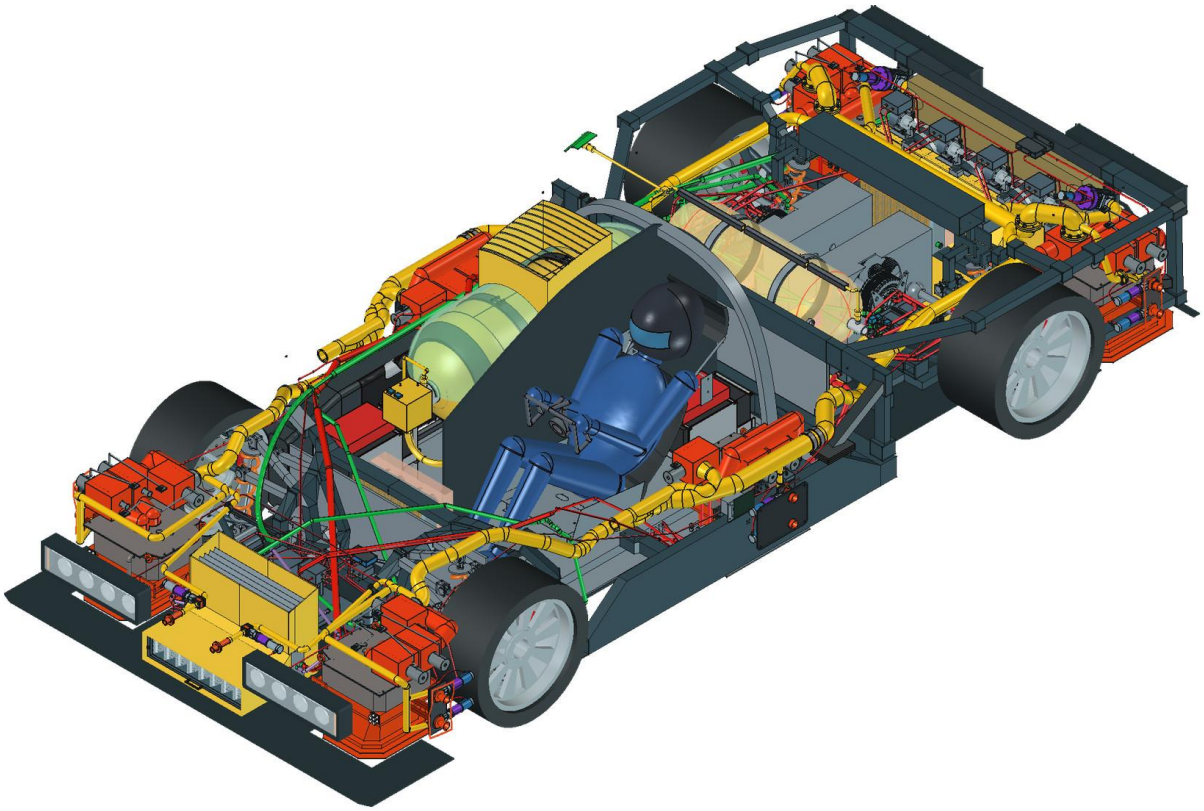

V2 with a hidden external skin. The mounting positions of the cabin, frames and units are shown.

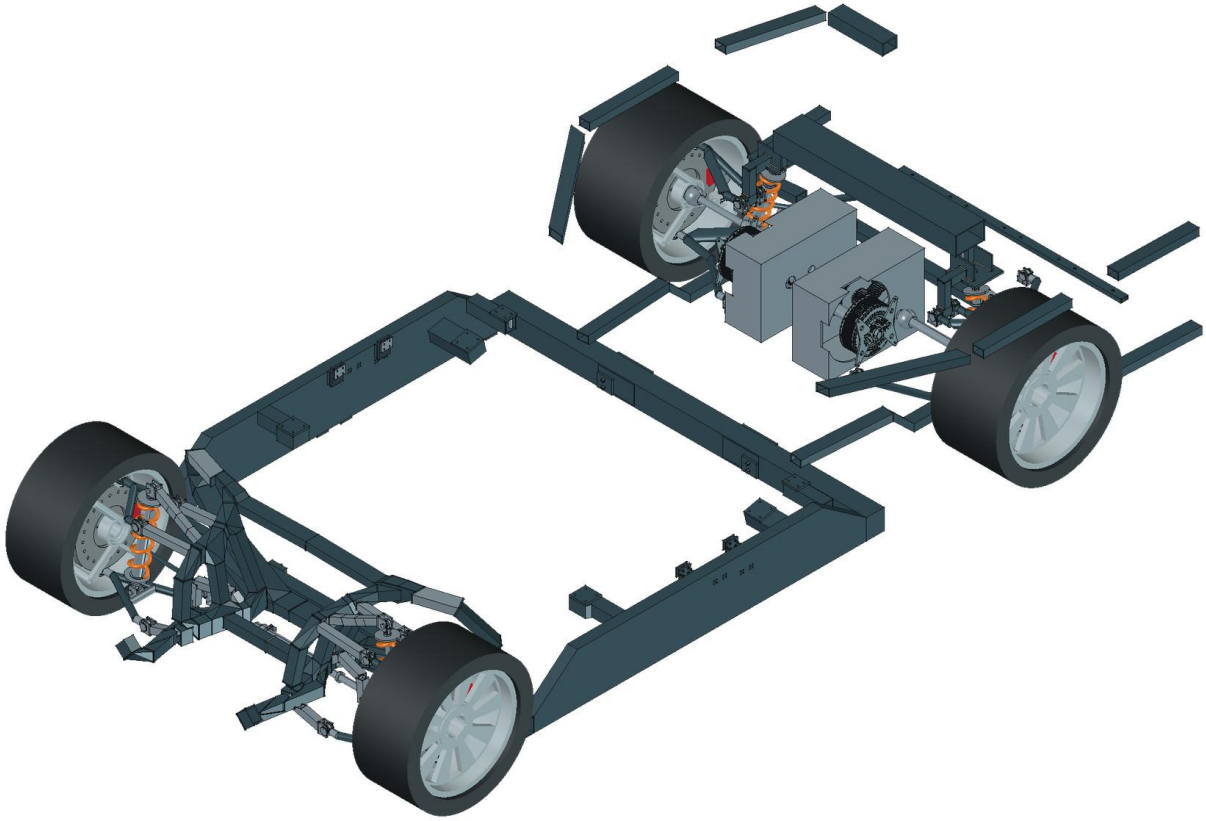

Suspension R07 V2 in the installation position. To read the load pathway, wheeled knots are shown together with force ties.

Communication	What to check together
Cocoon and frame	Mounting datums, local reinforcement, openings and access to the console fasteners. Moving a vessel or nozzle requires checking the new loads and changes to adjacent clearances.
Driver and management	Landing A GUIv4, way of entry and exit, review, access to controls, mounting chairs and belts. The dynamics of the landing are checked by movement and acceleration in the fastening of the chair.
GasR2 and service	R06 explores the course of the upsurge after the conditional release of the opening, but R07 retains the status of HOLD for actual removal. There should be a trajectory, a tool, fixed neighbors and reassembly.
Electrical drive	Battery, power distribution, power electronics, wheel drive and cooling form a circuit of the road mode. For comparison, the power on terminals, shaft and wheels is distinguished and the temperature and state of charge are monitored.
Landing	The tire forms the first contact. The prudent stroke takes part of the energy, damping reduces the rebound. After the first touchdown, the reactions of four wheels, a break, secondary touch of the body and the load of the chair are evaluated.

What does TextToCAD give here

The two branches can be checked against the common R01 model by comparing identical names, datums and interfaces, reproducing viewpoints, and identifying which assemblies a change affects. In D02, BRep and placement comparisons traced the mass properties of 36 lift-system parts to their sources. Correcting the subtotal for this group still leaves the complete mass ledger, centre of mass, inertia and system performance open.

In R1.1, 111 pairs of intersections V1 and 93 V2 for direct support zones in the verification area are indicated. This is a list of pairs for analysis, not the number of parts to be replaced. Contact that encloses or collision is confirmed for each pair in its position.

Sources

F22 · F22 · R07 · Native files, coloring, visibility and SHA-256

F140 · F140 · D02 · Convolutional composition and mass V1/V2

F141 · F141 · Option technical task R1.1

ARGON · Acceleration to Touchdown

How to Read Traffic Scenarios and Numbers

What Happens in Phases

Phase	How the Movement is Changing
Acceleration	The moment of the drive is transmitted to the wheels, and the road through the contact spots speeds up the car. Pressurling increases the load on the tyres while there is contact.
Distance and transfer	As the wheels unload, the support reaction leaves. Then the machine retains the velocity gained and changes it under the action of weight, aerodynamic and reactive forces. For height, the projection of traction up is important.
Turning and Decrease	The difference in reactions creates moments. The displacement of the centre of mass or a change in orientation changes the shoulders and projections of forces. The braking begins before the contact and depends on the orientation, air residue and valve dynamics.
Touching and pressing	The speed of the contact point depends on the movement of the center of the mass and the rotation of the body. After the first touchdown, it is yet to be collected stable reactions of four tires and extinguish the vibrations.

Two base runs R06 at 60 km/h

Parameter	V1 panel_fit	V2 rear_cover
Time / range	2,555 s / 43,21 m	2,291 s / 38,26 m
Minimum Gap Peak	5,41 m	5,17 m
First contact point	Front splitter	The Front Left Tyre
Point speed down	3,91 m/s	10,06 m/s

The data relates to the archival geometry R06 and the inputs R3. No base running line meets the point speed threshold down 0.50 m/s of R1.1. V1 does not further comply with the first tyre touch requirement. The peak of the gap refers to the minimum lumen under the body and differs from the height of the center of the masses.

Encore and Kickflip

Encore starts with a simulated rest start, Kickflip with a calculated 60 km/h. In the series with an added equivalent stock and side nozzles, four individual calculations performed a given revolution and the first touchdown with a tire at 0.243–0.265 m/s down. With the initial stock, the same options gave 7.83–10.16 m/s down. In V2, off side exits with a comparable margin gave orientation errors of 26.91° for Encore and 87.40° for Kickflip. Therefore, one small touch speed does not characterize the entire maneuver.

For the complete withdrawal of R1.1, it additionally requires agreed angles and angular speeds, a stable four-wheeled support for a window installed and a seat load control. The stored runs end with a geometric touch or use individual scenarios, so this data is not enough for acceptance.

Sources

F151 · Saved rows, results and checkpoints

F149 · Four run with side nozzles and control pairs

F141 · R1.1 requirements for touch and compression

ARGON · Reading the Showcase

From CAD image to telemetry and source

The project has two different showcases. Showcase R06 on F: shows two configurations, preserved trajectories and check-out stands. Showcase of systems on D: shows the device of the nodes, the dispersion and functional demonstrations. In the report, both are used for their intended purpose.

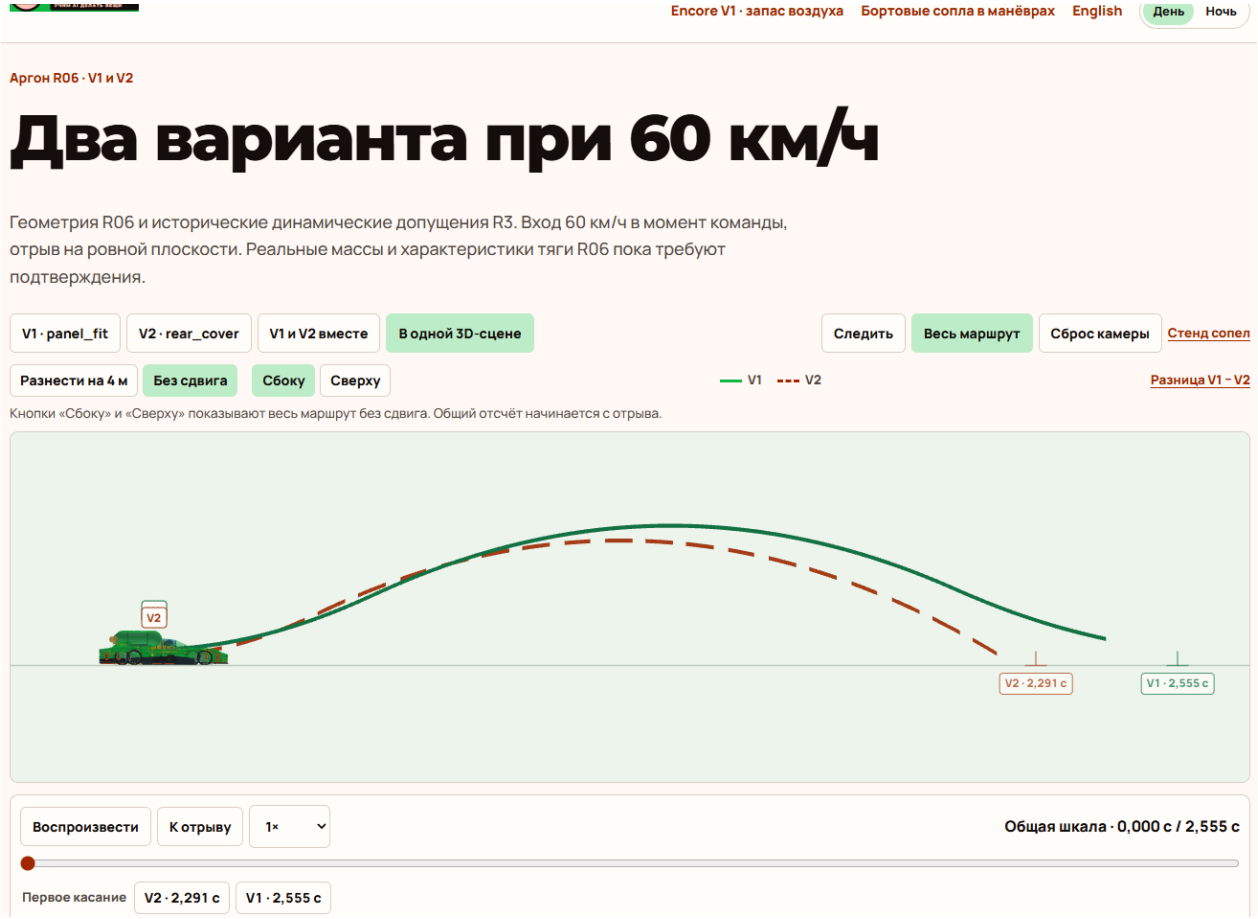

Showcase R06, total lateral view. On one graphic field you can see two trajectories and moments of contact.

Route via showcase R06

Screen	How to use it
Atlas of Systems	First, compare the assembly V1 and V2, then open the dispersion and the selected subsystem. For geometric verification, proceed to the FCStd and the audit documents.
Two devices in one scene	Choose a common view, then “Side” and “top”. The 4 m shift the model is visually 2 m in each direction. "No shift" returns the calculated cross-state.
General scale	Go to 2,291 s and 2.555 s. V2 is fixed on its frame before V1. The Dalek on the V2 graph compares the moving V1 s fixed V2.
Stand Nospel	Takes the corners of the selected frame. Conditional interest teams and auto-alignment allow you to see the connections between the difference between the difference of traction and the axes of orientation.

Screen	How to use it
Positioning	Automatic mode shows a given point and unfulfilled team balance. Manual allows you to open a separate way out and compare the reaction with the flow rate. “Switched off” gives a control scenario.
Maneuvers	Choose a profile, option and frame of the start of braking. See together the gap, orientation, air and the speed of the contact point. First check the name of the series and the initial stock.

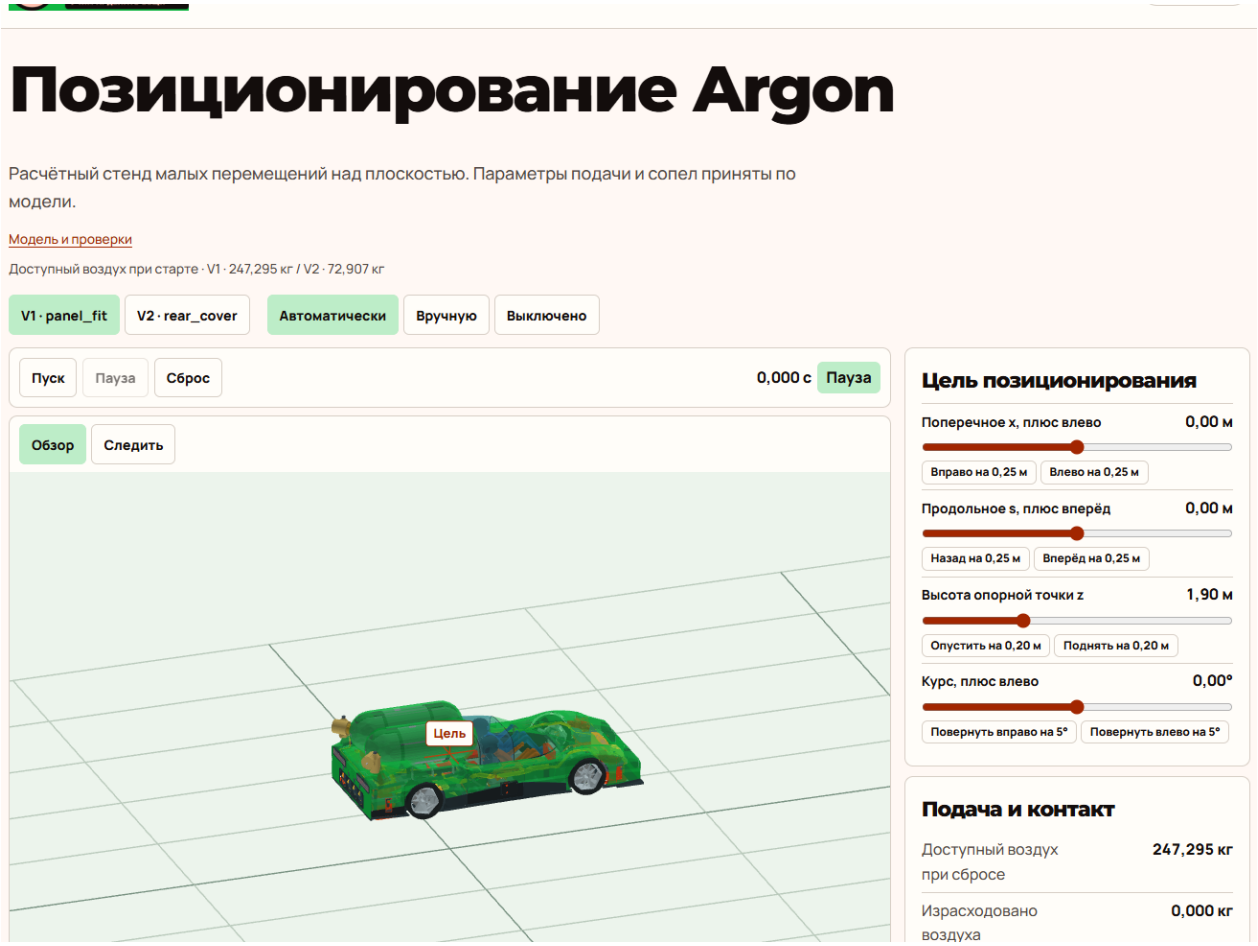

Interactive positioning R06. The posture and available commands are shown next to telemetry.

In the positioning test for the purpose of 0.22 m to the left and 5° course, both versions reached 0.189 m to 1.10 s and about 4.55°. The estimated balance differed: 163.83 kg in V1 and 5.91 kg in V2. This illustrates how a close intermediate response hides different reserves to completion.

Route on the showcase of the device

In the showcase of the systems, open the "Consol", compare the assembly with the spread and turn on the demonstration. The jet indicates the direction of outlet of the air, the arrow of force - the reaction to the body. In the AIR section, switch the body and functional group, then open the filter and large skirt angle. The skirt modes, valve switching and sliding seal are to the demo models.

Sources

F152 · R06 · table of contents with hints

F153 · R06 · Atlas of Assembling and Systems

F136 · R06 · trajector player

F154 · R06 · positioning stand

F155 · R06 · maneuvers and telemetry

F146 · Systems Showcase · console, modes and composition

F156 · Showcase of systems · Registry of Engineering Bases

ARGON · Results and Conclusions

What CAD shows and what the project decision depends on

The strength of ARGON is the ability to compare two real native layouts with common installation bases and track the influence of individual systems. The main uncertainty is whether the mass and center of the chosen version, affordable traction, stock and suspension can jointly provide the desired maneuver and controlled landing.

What is known	What determines the outcome
Layout	Fixed native V1/V2, A GUIv4 and two families of nozzles. For release, you need coordinated power interfaces, gaps and actual service routes.
Strength and Stock	Archival and conditional calculations show sensitivity to consumption and orientation. For the solution of the selected machine you need a mass, center, inertia and measured characteristics of the joint branches.
First touchdown	There are verifiable geometric events and contact speed tables. For full landing, support reactions, racks, no body impact and arm evaluation are required.
Target +20%	First, the exact metric, comparable standard, configuration limits and uncertainty are fixed. Reducing the acceleration time and the increase in average acceleration by the same percentage set different goals. The result of the Tesla replica is taken into account separately from the data of the original.

The projected TG saves both configurations for comparison. V1 has a calculated reserve advantage and additional restrictions on the layout. V2 has a plate of placement in part of the nodes under consideration, but less reserve for prolonged use of traction. The overall choice depends on the data of one agreed assembly and a single verification program.

Sources

F23 · Committee dossier · comparison V1/V2 and definition of "+20%"

F141 · Optional TZ R1.1 · composition, criteria and test program

ARGON · Development History

Project 04 / 10 · P1.18 → P118 R07 · TZ R1.1

If you see this device for the first time

ARGON is a project of a wheel machine with two ways to place the same systems. Under the bottom, fans create a clamp to the road. Compressed air is used in a separate circuit of a short separation. The body, the vessels and the chassis determine how long the machine can work in the air and how it will return to the supports.

The question of the committee is whether Argon's one execution can exceed Rocket's comparable indicators by 20%. The project has two layouts, V1 panel_fit and V2 rear_cover. For both, the owner fixed the increased GasR2 and the driver A GUIv4 seat for a height of 192 cm and a mass of 98 kg.

The showcase compares V1 and V2 in R06. For new illustrations used both native builds R07, V2 rear_cover and V1 panel_fit. The camera and scale are the same.

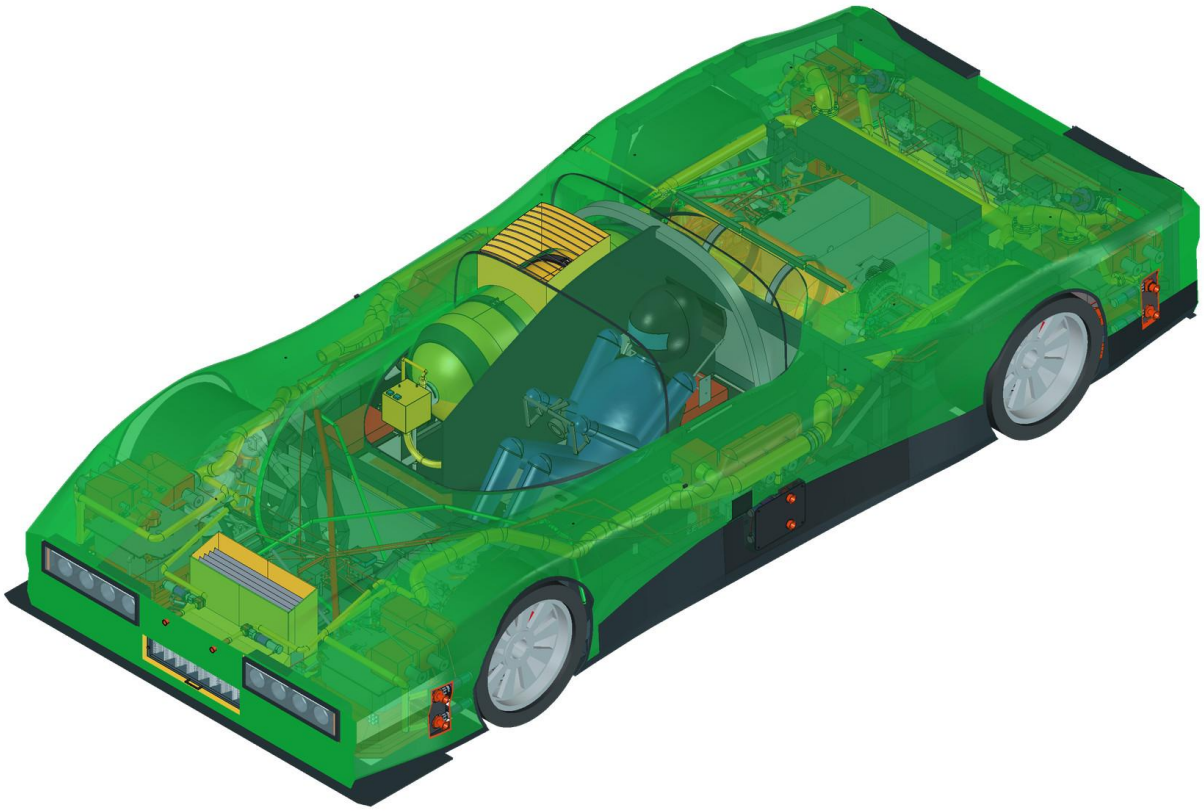

ARGON R07 V2 rear_cover. Native green color of translucent panels. Shades of the lantern and other materials are transferred from CAD. The scale is common for V1 and V2.

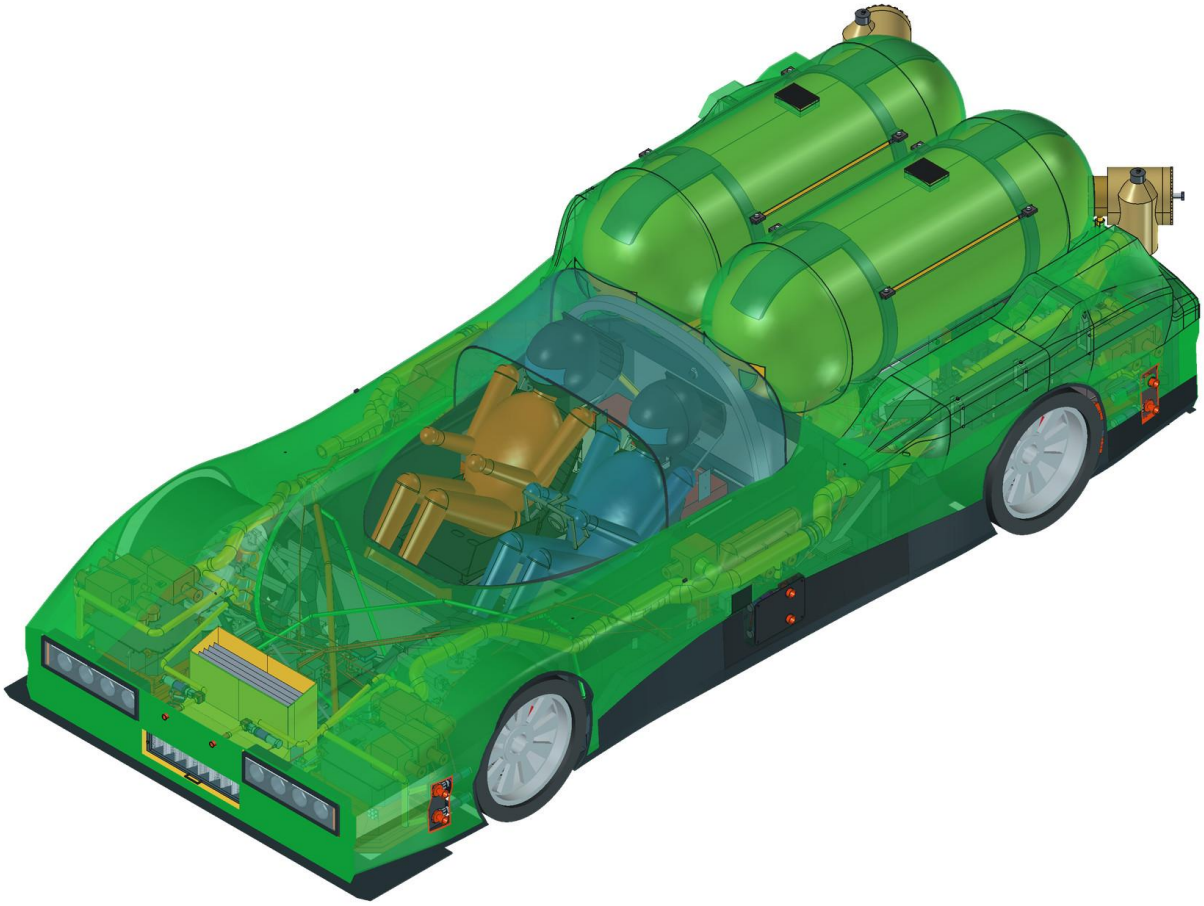

ARGON R07 V1 panel_fit. Native green color of translucent panels. Shades of the lantern and other materials are transferred from CAD. The scale is common for V1 and V2.

Device and main units

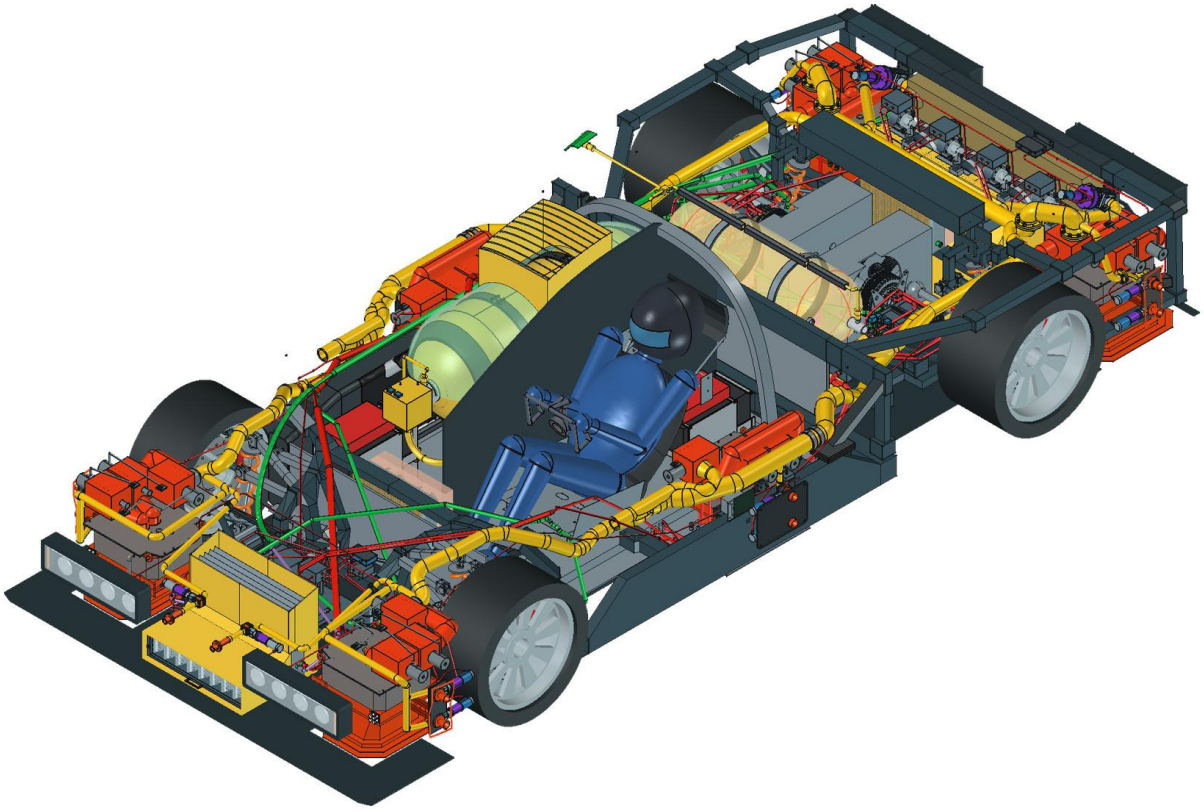

V2 rear_cover. Open arrangement. The outer skin is hidden. You can see the location of the cabin, power elements and units.

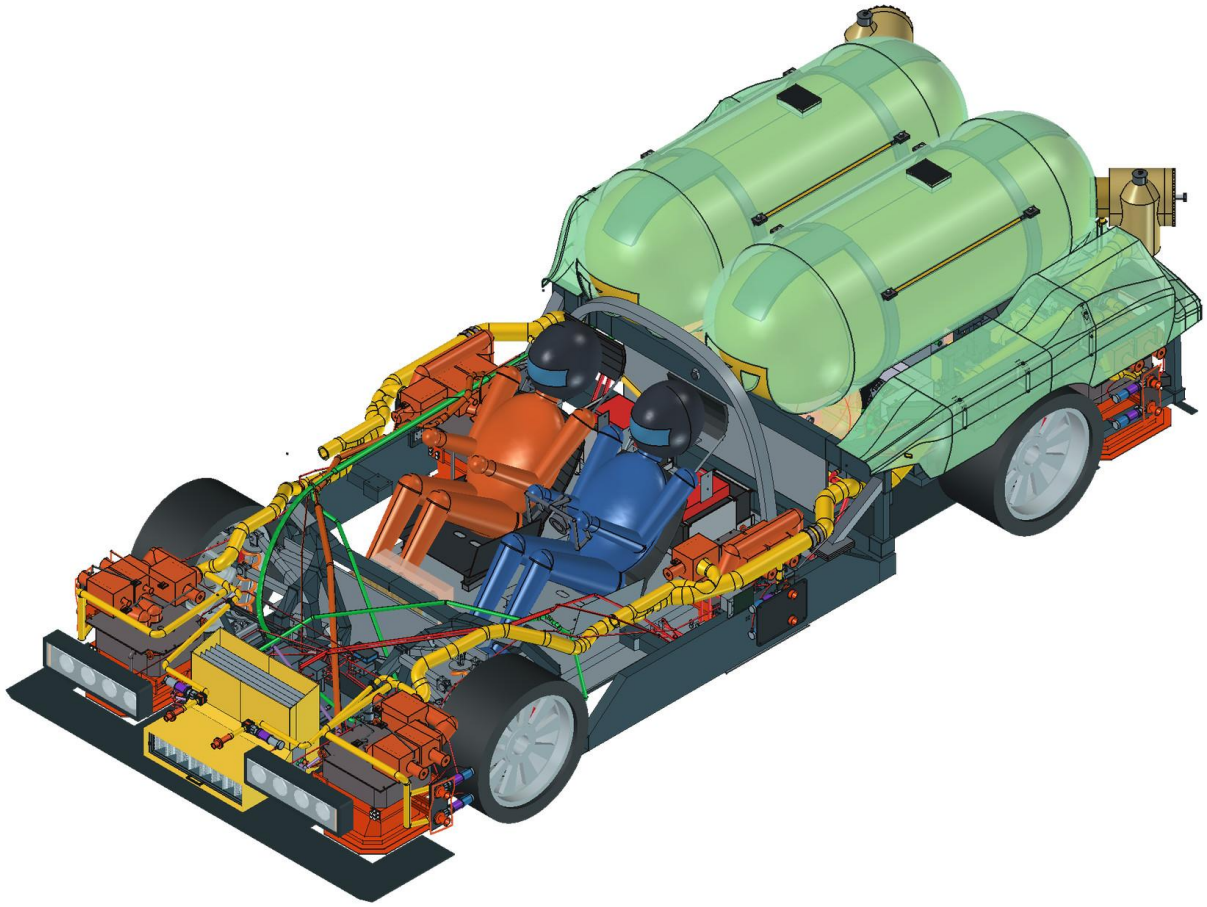

V1 panel_fit. Open arrangement. Variant V1 in the same perspective. The layout of the cocoon and vessels next to the cab is read.

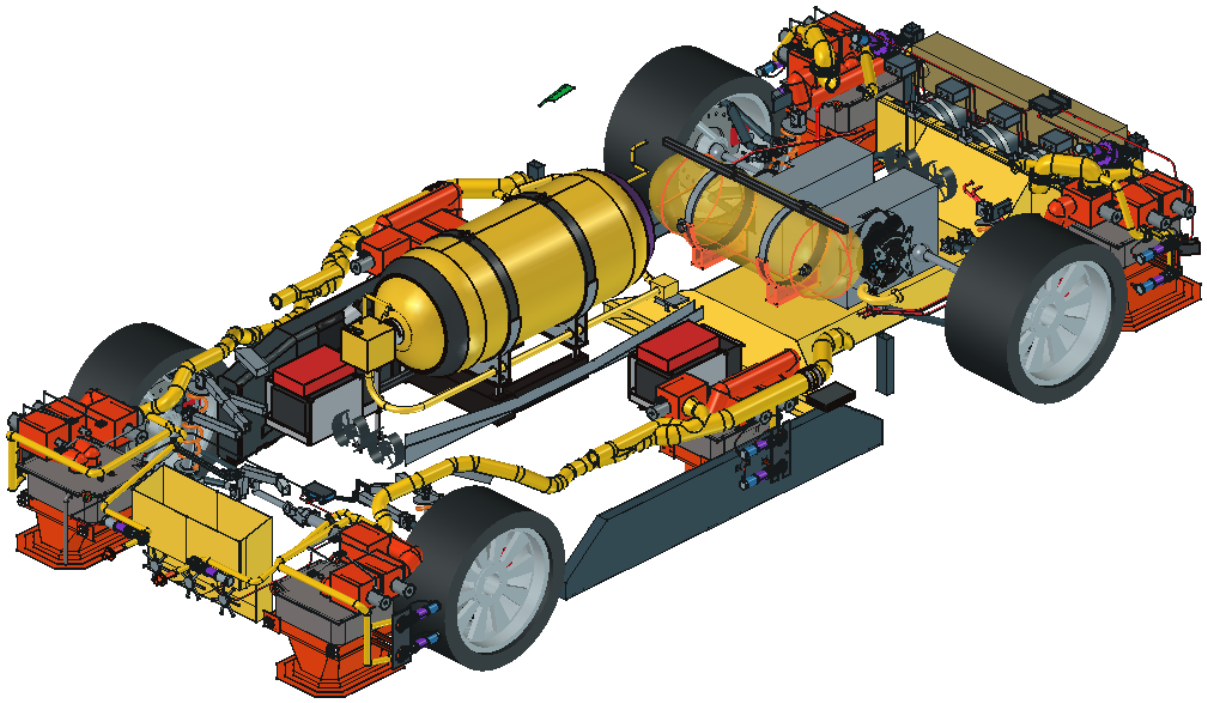

V2 rear_cover. Pneumonia. Verification of R07. The enlarged gasR2 vessels are considered, the mounting and the launching tracks on the V2 chassis.

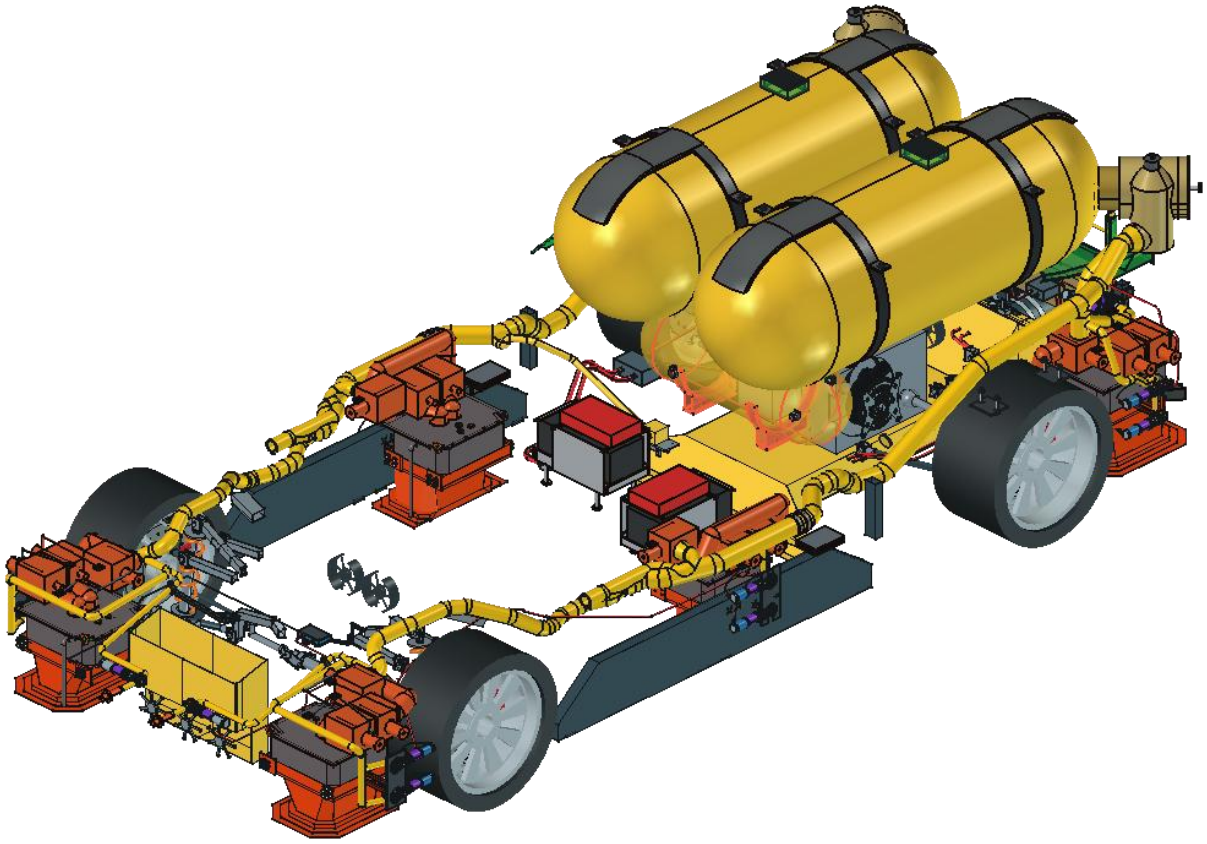

V1 panel_fit. Pneumonia. Verification of R07. You can see the layout of the V1 group of vessels, the lodges and the tracks relative to the chassis.

Sources

F129 · V1. Verification of appearance R07

F130 · V2. Verification of appearance R07

Principle of operation and flight

On the ground, the car is dispersed with wheels. In the design rebound, the vertical impulse is created by air outputs, and the difference in forces at dispersed exits creates moments for orientation. The scheme combines dispersal, separation, decrease and contact. Fans, filters and pallet chamber with a skirt belong to the ground clip.

The saved V1 and V2 reach the rise on assumptions. Both initial contacts exceed the permissible vertical speed of 0.5 m/s.

Sources

F23 · ARGON, design dossier V1/V2

Showcase ARGON R06. V1/V2 Comparison and Flight Cycle

Continuous AIR Camera Skirt

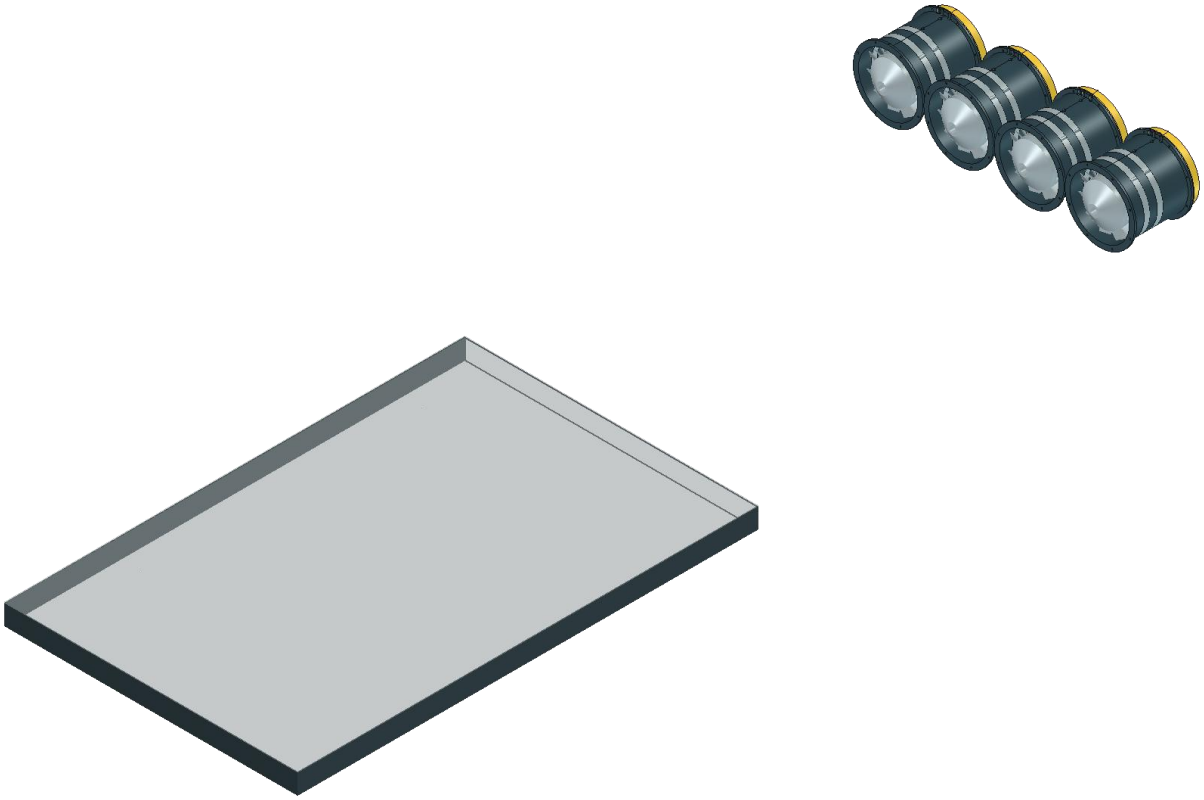

ARGON R07. Native skirt and AIR camera roof. The roof is shown semi-transparent to see the continuous edge.

In native models V1 panel_fit and V2 rear_cover skirt - a common continuous circuit R1_ChamberSkirt under the solid roof of R1_ChamberRoof. The lower edge in the preserved geometry is on 5 mm, the upper at 90 mm from the support plane. The same composition of this node is recorded in both R07 files.

The AIR ground cycle connects the camera, air duct, filters and axial fans. When the air is removed, fans create a thinner discharge under the bottom. The lowered skirt narrows the input slit along the perimeter, reducing the subsong of the air. The rise of the skirt increases the lumen. The size of the press depends on the distribution of pressure in the chamber, its area of operation and real losses.

The R2 demonstration sets four synchronous linear guides and a conditional stroke of 80 mm. The gaps at the demonstration are 5 mm below and 85 mm at the top. The type and power of the drive, load retention, materials and shape of the flexible seal, ground clearance control, reaction to obstacles and safe retraction remain open.

Sources

F115 · ARGON. Audit of the AIR camera skirt

F116 · ARGON. Passport of AIR R2 demonstration

ARGON · AIR camera and continuous skirt

The general principle of V1 and V2 is the same. A solid roof forms the top of the chamber, the continuous skirt limits the path of the sucking by the road. The flow passes the tract with filtration and goes to the fans. The clip is determined by the difference between external pressure and the camera, the uniformity depends on the losses in the system.

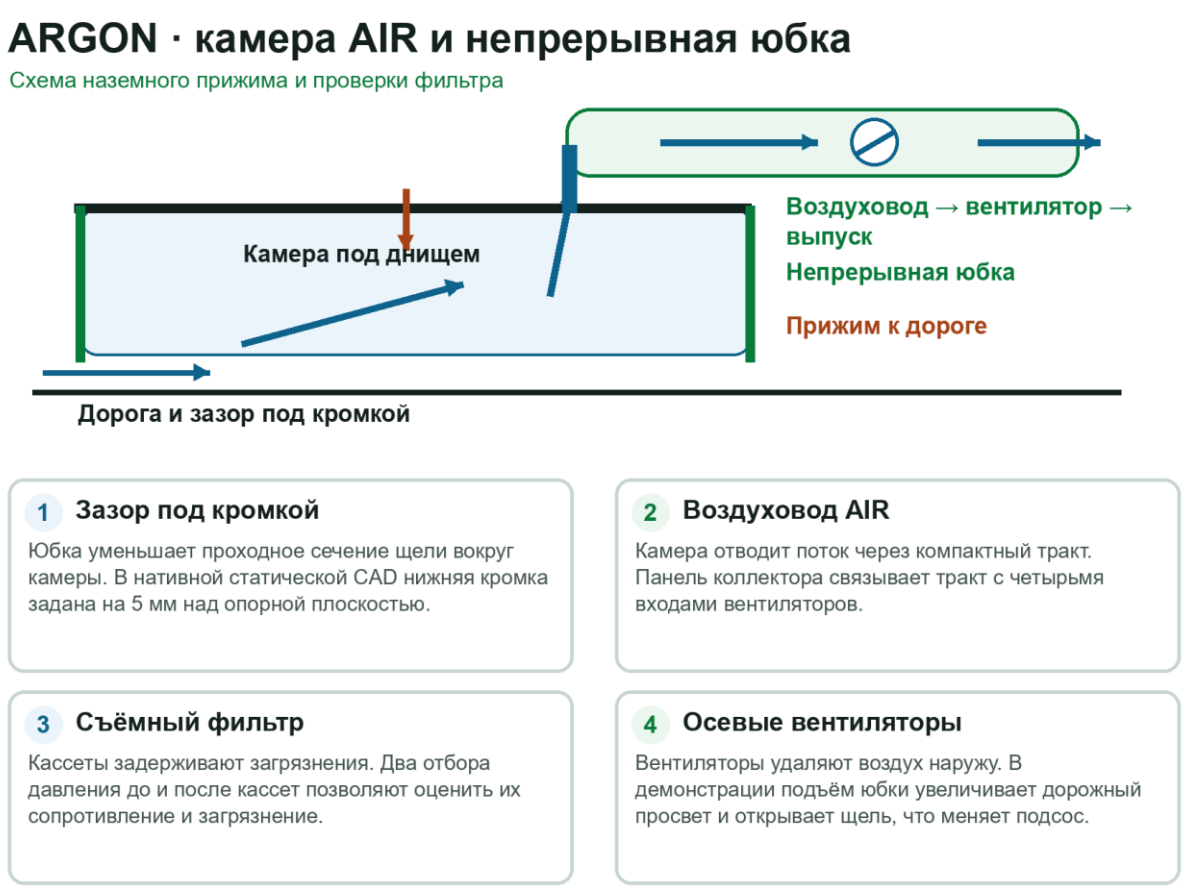

ARGON · AIR camera and continuous skirt. Ground press circuit and filter checker.

Knot or command	Flow, traction and action
A gap under the edge	The skirt reduces the passage of the slit around the chamber. In the native static CAD, the lower edge is given to 5 mm above the support plane.
Aircraft AIR	The camera takes the flow through a compact tract. The collector panel connects the tract with the four entrances of the fans.
Removable filter	Cassettes delay pollution. Two pressure sampling before and after cassettes allow to assess their resistance and contamination.
Axial fans	The fans remove the air outside. In the demonstration, the rise of the skirt increases the ground clearance and opens the gap that changes the subsoccal.

The course of 80 mm and four guides refer to the demonstration. Type of drive, safe retraction, tightness, actual losses and filter resource are open.

Sources

F116 · ARGON. AIR R2 passport and Demonstration Restrictions

F115 · ARGON. Filters, position of the edge and assumptions

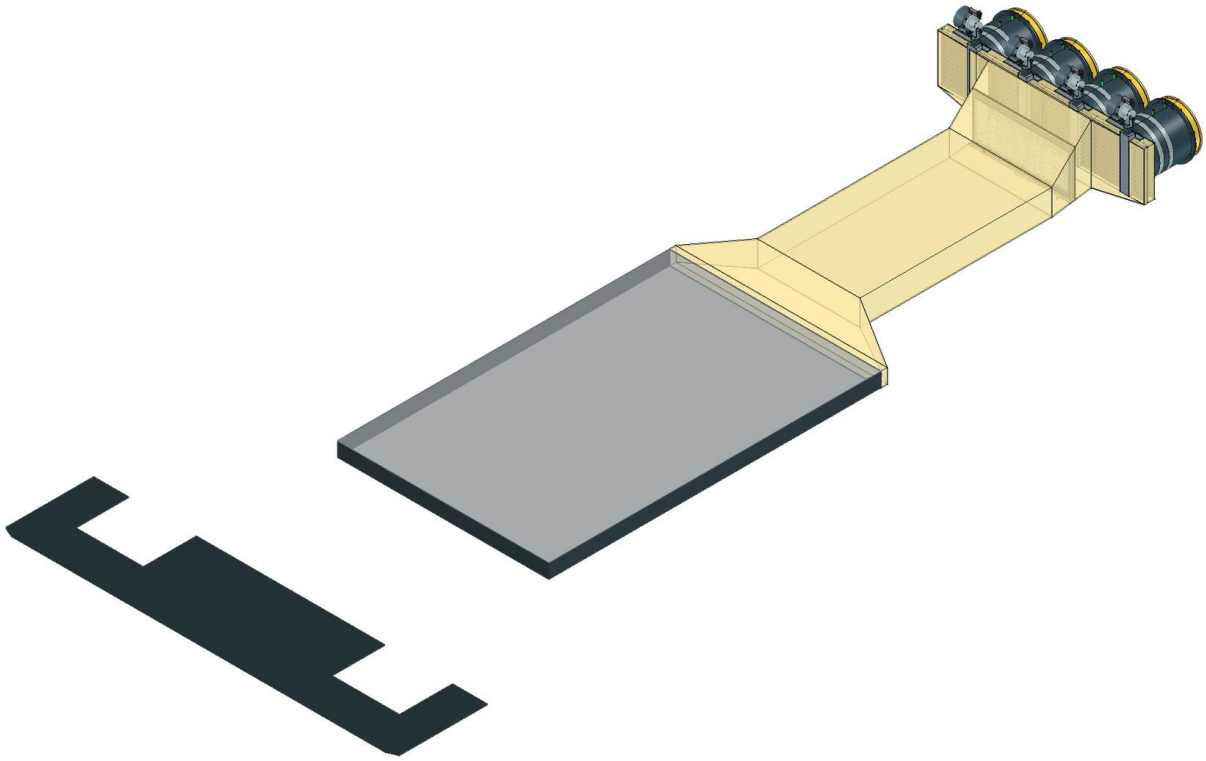

ARGON V2 R07. Camera and continuous skirt, tract, collector panel and four fans. The roof and duct are translucent.

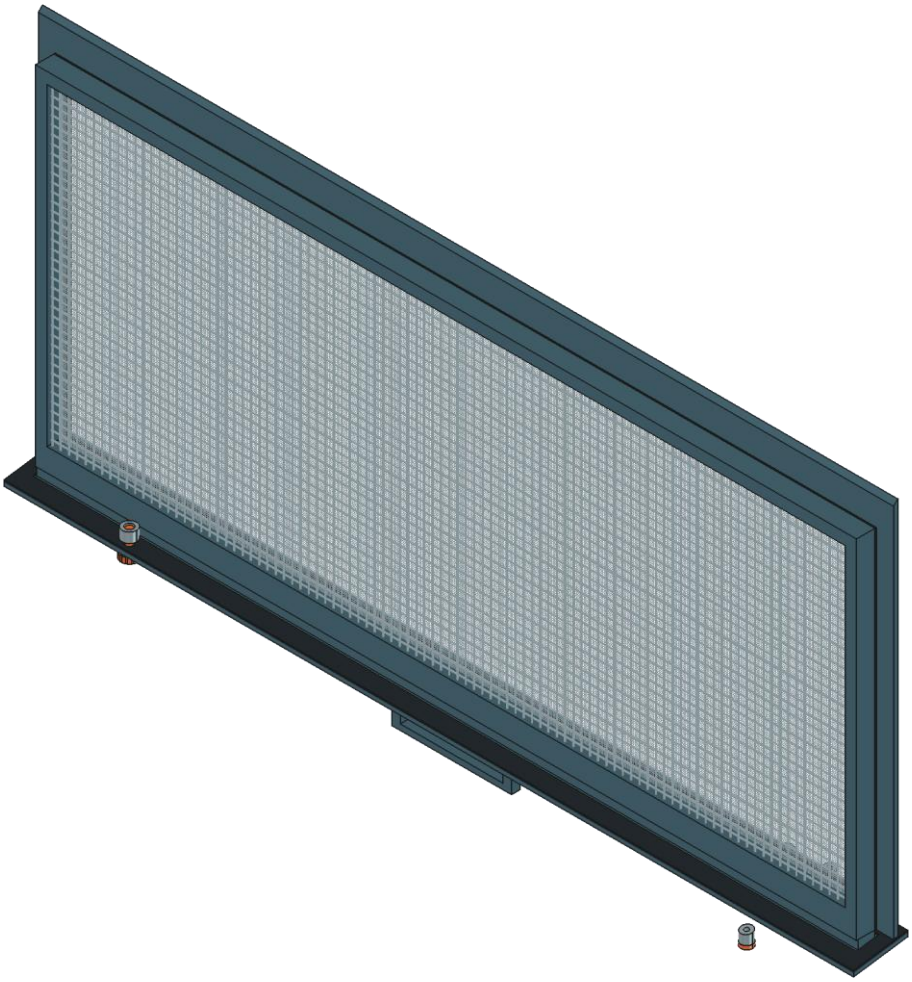

ARGON V2 R07. Selected native node of the removable bottom filter.

Nozzles management in the showcase

In a virtual stand, an increase in the lower reaction on one side changes the roll, the difference between the nose and stern changes the plungage. Conditional side nozzles change course. The traction vector inclination redistributes the vertical force into the lateral. The stand explains the action of forces, and the flight trajectory uses its stored calculation.

Sources

ARGON. Showcase R06 and nozzles control modes

Acceleration and balance of power

In ARGON, wheels create speed on acceleration, and reactive outputs give a short-term upset and control moments. The ground camera AIR increases the draught. In the air, the total vertical force, the direction of the vector and the speed at which the car has already broken off are important. V1 and V2 may respond differently to the same command because of the mass, alignment, stock and shape of the lower body.

Regime	What Depends on the Change in Motion
Ground dispersal	The moment of the electric drive passes through the tyres. Fan press helps use the clutch and consumes a separate amount of energy of the installation.
Air Transfer	Exit reactions are formed as vectors. The difference between the forces of the nose and stern changes the plungage, the difference on the sides is krank. Side effects on the course are shown as conditional in the window bench.
Decreased	With the growth of the inclination, the former full traction gives a smaller vertical component. Unconfirmed simultaneous supply limits the transfer of the scenario between performances.
The first contact	In the comparative R06 V1 was the first to touch the splitter, in V2 - the left front tire. So, the same question about acceleration before landing should take into account the posture and geometry of the contact point.

Behavior in the air and when touched

Phase	What Happens to the Machine
Acceleration and separation	In the comparative run of the R06, both versions start with a helm acceleration. Vertical outputs give an uplift boost, and the moment from the dispersed exits changes the position of the body. Gas stock and affordable supply limit the duration and ability to align.
Comparison V1 and V2	Under the same initial conditions in the comparative run, V1 spent 2.555 s, V2 - 2.291 s in the air. In V1 the front splitter was the first to touch, in V2 - the front left tire. This shows the effect of the orientation and geometry of the front on the very definition of touch.
Limit of the result	With a higher conditional margin, individual scenarios reduced the vertical velocity of the first touchdown to 0.243–0.265 m/s. In the initial stock, there were significantly faster touches. The speed in the first event characterizes one moment and does not prove a stop on four wheels.

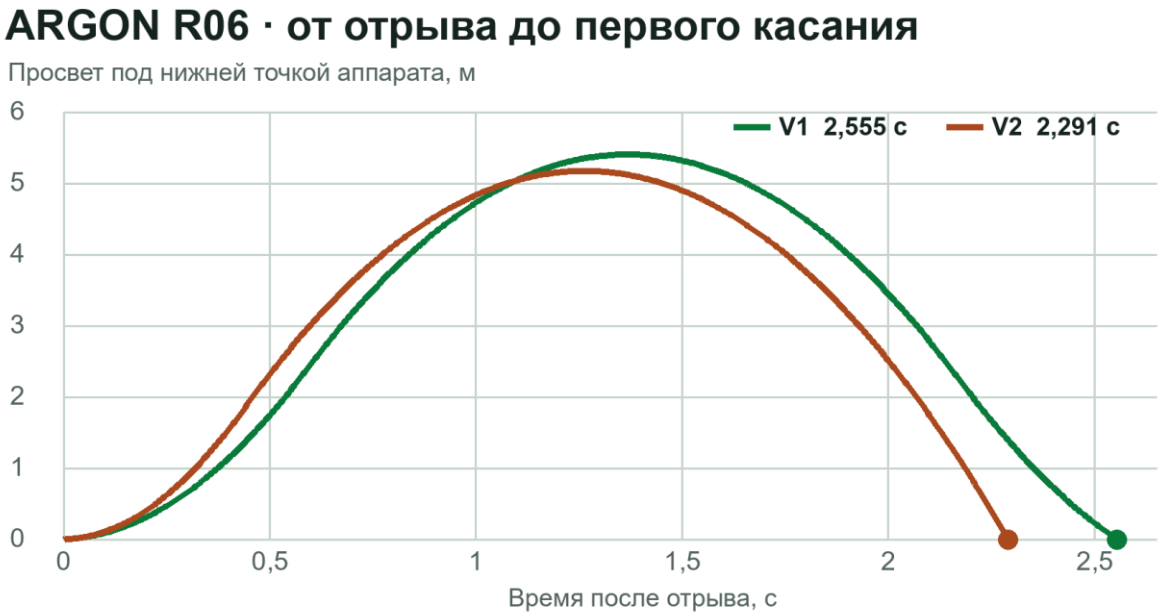

V1 — передний сплиттер. V2 — передняя левая шина. Запись заканчивается первым контактом.

ARGON R06. The lumen of the lower point of the device after separation in the original V1 and V2. The source is two CSV showcases. The mark at the end means the first touchdown.

Sources

F134 · ARGON V1. The light and moment of the first touchdown

F135 · ARGON V2. The light and moment of the first touchdown

Suspension in the collection

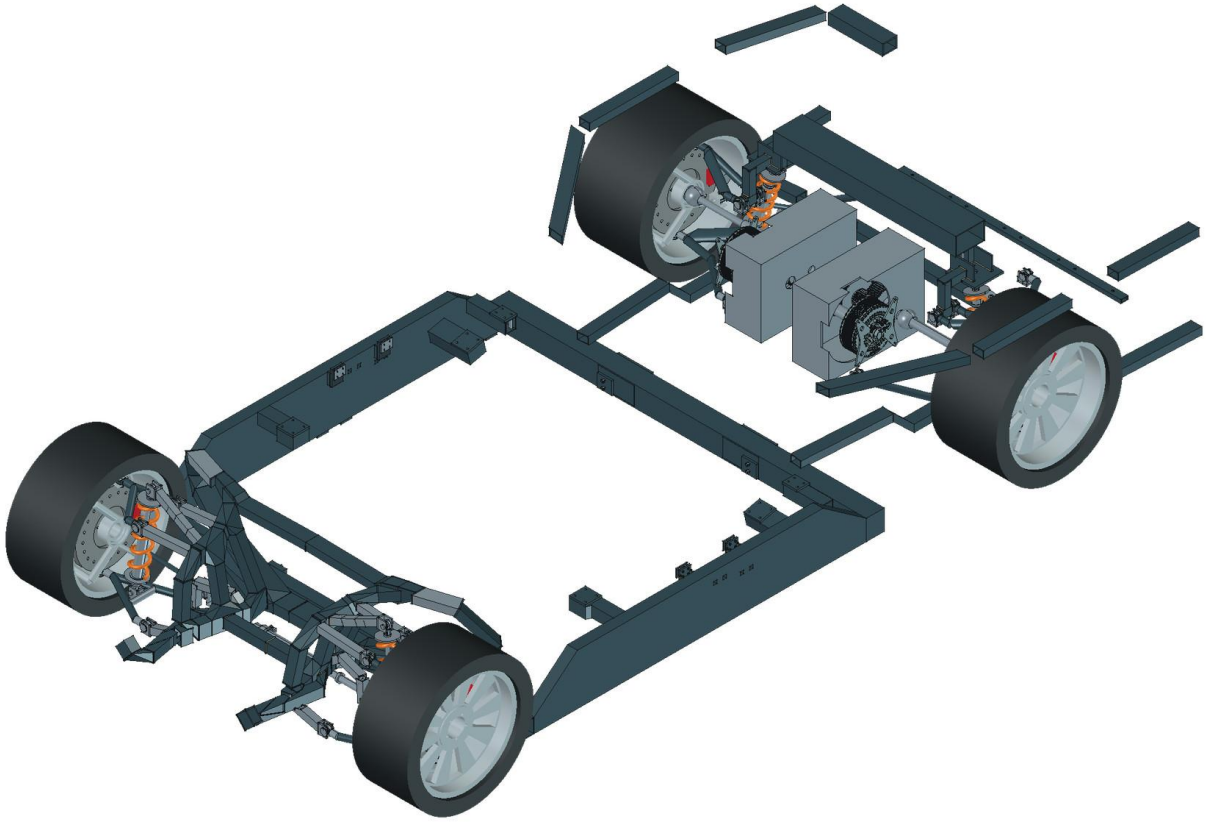

ARGON V2 R07. Wheels, suspension and chassis in the agreed provisions. The body panels and units are hidden for reading the power connection.

The installed V2 view shows how the wheels, knuckles, control arms and strut mounts connect to the load-bearing assembly. The vertical reaction and longitudinal tyre force pass through the arm mounts and upper strut mounts. Landing analysis considers which part contacts first, where the load travels, and how much usable stroke remains.

R06 scenarios vary in first contact. R07 is used to display the installed layout. The connection of the geometry of the chassis, mass, flow and strength in one test version remains open.

Sources

F23 · ARGON. V1/V2 Comparisons, standard and conditional scenarios

F136 · ARGON. Showcase trajectories

How the project has changed

On November 19, under the designation P1.18, two different V1 bases were discovered. TGol referenced to integrated_service, and estimates, test program and R3 calculations - to panel_fit. For further comparison, panel_fit was chosen and a pair of V1/V2 files were fixed.

R01 introduced a common skeleton of a cocoon and a frame with 93 rappers and base 3 205 mm. In R02, 101 native objects V1 and 37 objects V2 were tied to it. R03-R06 checked the location of the rear GasR2, supports and the order of service of both assemblies.

In the R06 trajectory of the Ascent GasR2 by 1 450 mm passes after the conditional release of the opening. Access to fasteners, removing glass and power joints remained open. The passport R07 recorded a change in the appearance of the vessels. Geometric and dynamic conclusions retained references to the revisions where they were received.

On November 23, the dossier and expert answers formed the basis of the optional TK R1.1. The Committee is invited to the first to examine V2, keeping V1 in the reserve. The final choice is tied to measurements by the end of the eighth week.

Sources

F21 · Inquiry of two P1.18 bases

F22 · Passport of native V1 and V2 R07

Design in AI-CAD TextToCAD

The two options must be compared by general coordinates, but retain the layout differences. The increased GasR2 and the driver’s seat of the A GUIv4 are set by fixed interfaces with a coconut and frame. If the vessel moves or the driver's seat changes, not only the neighboring parts are checked, but also the maintenance, mass and center for the related flight scenario.

The common R01 skeleton included 93 datums and a 3,205 mm wheelbase. The R07 release allows both revisions to be reopened and compared at the same scale. It also separates changes to the vessel materials from the R06 geometry results. TextToCAD uses the common skeleton, saved native branches and checks on dependent systems. This preserves shared datums and manual edits and ties each conclusion to the relevant version.

Sources

F22 · ARGON. Revision of the R07 General Skeleton Audits

F23 · ARGON. Dets by V1/V2 and power restrictions

Results and conclusions

V1 and V2 differ in air, first contact, and available gas balance. The choice of option requires one comparison and one assembly, in which the supply, mass, supports and stop are simultaneously checked.

ARGON · Archived Results and Limitations

P1.18 → P118 R07 · TZ R1.1

For V1 and V2, different balances are fixed.

In the comparative analysis of one stored lifting record, the V1 s is a conditionally increased reserve of 43.90 kg gas, V2 even with a reserve for Encore lacks 60.14 kg. In both versions, the transfer of the record goes beyond the accepted limit of simultaneous submission.

In four scenarios, the R06 s additional conventional stock model completed its turn and touched the shita at a speed of down 0.243-0.265 m/s for the first time. At the initial reserve, the range was 7.83–10.16 m/s. The first touchdown and steady stop on four wheels are two separate events.

For V2, the experts proposed to confirm a minimum of 310 kg of useful gas at a gross weight of up to 3 350 kg on one machine. The benchmark is 330 kg. The values relate to the conditions for choosing a branch. In the options of direct supports of the additional package, 111 conflicting pairs for V1 and 93 for V2 were recorded.

What Remains Open

There is no confirmation of the compatibility of the utility, the total mass, presentation and durable serviced support in one composition. The outer volume in CAD sets the geometric boundary. For a useful capacity, these vessels and working mode are needed.

The expert matrix covers 42 questions. The rules of the countdown "+20%", a single attempt and a series, as well as a high-altitude reper, are made for approval.

The nearest decision

Determining the committee's decision on the basis of the comparison. Reduce the statement of mass and passport data to one machine, evaluate both layouts and consequences for the frame, cochon and service. In terms of 17 works for 28 weeks from the agreed start.

The SHA-256 masters and two FCStd R07, the R1.1 checklist, the expert answers matrix and the work plan are verified. The FCStd selected reopening materials are available in the native check section.

Sources

F23 · Dossier of the committee with a comparison of V1 and V2

F24 · TZ R1.1 for geometry R07

F25 · Matrix of 42 expert replies

F26 · Plan 17 work for 28 weeks

F27 · Control inventory R1.1

ARGON · Data and Method

P1.18 → P118 R07 · TZ R1.1 · Primary Materials

A key change in the arguments of ARGON is the transition from comparing the two V1/V2 names to the comparison of individual bodies, calculated conditions and criteria for the future test.

Identity of Assemblies

In the D02, the nominal visible bodies R06 were compared. For 4 726 bodies coincided with the inner name, BRep form and placement. Another 304 bodies of the same name had a preserved form or position. Only in V1 you can see 715 names, only in V2 - 616.

The difference between stored data does not establish the origin of each change. These four groups can be attributed to the physical composition only after verification with the authority of the installation.

Where to check - "Complement on the saved FCStd".

Sources

F101 · RESULT_RU.md

Clarification of mass statement

The lead covers three groups of 12 parts. The geometry of the selected V1 and V2 coincided, but the former mass of the group in V2 was 4.211583 kg. According to the accepted density and current volume, it was recalculated to 3.328418 kg. The amendment was −0.883165 kg.

This amendment relates to 36 parts. The total mass, centering, inertia of the car and the material of the seals remain independent questions.

Where to check - "What is decided on 36 items" and the table "Only 36 details".

Sources

F101 · RESULT_RU.md

Removable knot in the preserved scene

The new band R06 at the first discovery is hidden. For V1, 193 bodies of landing A GUIv4 were checked, for V2 - 109. The described virtual passage begins after the conditional release of the opening.

The presence of objects of study in the FCStd does not turn them into an installed unit. To withdraw on dismantling requires access to the entire fastener and the real order of removal.

Where to check - "Removable section of the rail of the lantern" and the final reconciliation of A GUIv4.

Sources

F102 · RESULT_RU.md

ARGON · Evidence Review

P1.18 → P118 R07 · TZ R1.1 · Primary Materials

Transfer of data between projects

Take 544 footage of the saved record of the replica Rocket for 5.3475 s. The integral in the frame is 351.712 kg, the accumulated value of the original row is 351,775 kg. The difference of 0.063 kg characterizes the sampling of reading.

The row is substituted in the balances of both versions of the Argon. When the stock is exhausted, the original trajectory loses its applicability, so the assessment does not replace the conversion of movement.

Where to check - the Introductory paragraph and the table "Charge of the Argon model".

Sources

F103 · REPORT_RU.md

Expert response and the rules of the boxing

Q02 disassembles two interpretations of “+20%”. The reduction of time by 20% gives 0.8 initial time, an increase in average acceleration by 20% at the same end speed is the initial time divided by 1.2. Q03 requires a reper of heights. In Q41, the V2 choice is still proposed to the committee.

For comparison, the same starting conditions, interval, execution and error boundary are needed. The same percentage in the name of the task allows numerically different requirements.

Where to check – Rows Q01–Q03, Q34, Q41–Q42.

Sources

F25 · Matrix_responds_RU.tsv

Procedure for decision and responsibility

The preliminary review is scheduled for the weeks 4-6, the decision is 8 after work 06, 07 and 08. The committee may choose one branch, leave both or return for processing. Recordings of appointment, actual date and proof are provided for in separate fields.

The schedule for 28 weeks is counted from the agreed start. The actual implementation is determined by the completed result and the decision of the authorized commission.

Where to check - Work 09 and control point CT-1, works 15-17.

Sources

F26 · Plan_Work_RU.tsv

Condition of the next decision

When choosing V2, present on the same composition a mass with the driver and battery, a useful supply, the result of the layout and the permissible path of forces. The CT-1 protocol should preserve the reasons for the decision, open restrictions and the fate of the reserve V1.

Road Vehicles and the Roadster Reconstruction

Comparison of four programs

Each program has come to a different solution. The total goal of "+20%" requires specifying the comparable indicator, initial execution and the set-off rule.

Project	Confirmed result	Decisive open question
IMPULSE	The standard remains on the ground	Conflict of the rear suspension with internal cavities and the absence of a proven feed.
VEKTOR E-26	The service route of two cassettes is checked	The weight of the touch varies by 91.6 kg between R12E and R12I. Strength remains open.
Tesla Roadster Rocket	The main series 5 m remains on 0 of 4	DEV45 describes the saved replica data. New measurements for three stands are still expected.
ARGON	For V1 and V2, different balances are fixed	Additional stock changes the mass, frame, cocoon and access. All targets in one car are open.

Different Scale of Expert Analysis

IMPULSE 61 requirements and 18 indicators, VECTORA has 54 responses and 35 indicators. Roadster has 24 expert questions and 280 initial registry requirements. ARGON has a matrix of 42 questions and a plan of 17 works. The number of records measures the amount of document development.

Sources

F06 · Variable TK R06 in Russian

F13 · Three options E-26 and conditions of choice

F19 · DEV45: current TZ RU/EN and bench programs

F24 · TZ R1.1 for geometry R07

Six Historical Reconstructions

Comparison of digital results

Project	Result in your field	What limits the conclusion
LLTV	31,741 s in the air in the nominal model	Historical trajectory and limit possibilities are not defined by this calculation.
C400P2	4.51 km in P1 script for two bases	Cost and resistance values are calculated. RR-H1 in the same chat is another device.
SG1262	Reverse ETEP importes passed 8 625 of 8 626 bodies in tolerance	One facet went for local tolerance, the standard FeedBack status is partial.
XJ314	The estimated stock of the checked section increased from 0.65 to 2.47	The path of effort through the top joint into the frame and the material requires confirmation.
Ludion 002	50 pairings are checked in FCStd and STEP	The historical dimensions of pairings and synchronous departure data remain open.
TURBOLET	The first discovery of the R5 is repeated in FreeCAD	Museum equipment, educational dynamics and test board have different bases.

How to read a table

The phrase “in tolerance” refers to a specific geometric test. The calculated margin of safety refers to the selected sections and loads. The duration of animation, time without support and historical flight duration can have three different values.

Airflow, Thrust and Control

Functional circuits and CAD incisions

Three streams have different functions. Pallet fan fans give a cliff to the road. Cold-gas outlets use air supply for short reactive traction. Gas turbine plants create continuous thrust on the main flow.

If the total vertical force is less weight, the supports are still loaded. After unloading, the strength of the vertical strength and weight changes the height. The traction tilt gives a horizontal component. The moment depends on the direction of force and its shoulder relative to the center of the masses. A pair of opposite forces can rotate the device with a small total lateral force.

The tilt means tilt to the right or left, plungage - climbing or lowering of the nose, lyration - changing course. CM is the center of the masses. The lumen shows the distance from the site to the nearest point of the device.

Sources

Check-in streams and commands

A Leaf of native air ducts with Russian signatures

Protocol of schemes and native personnel

Cold-gas circuit · from stock to traction

The compressed air supply stores energy for a short reactive pulse. The valve doses the supply. When expanded into the nozzle, the pressure turns into the speed of the jet. The reaction to the device is directed against the jet. The position of the nozzle relative to the center of the mass determines whether it also creates a torque.

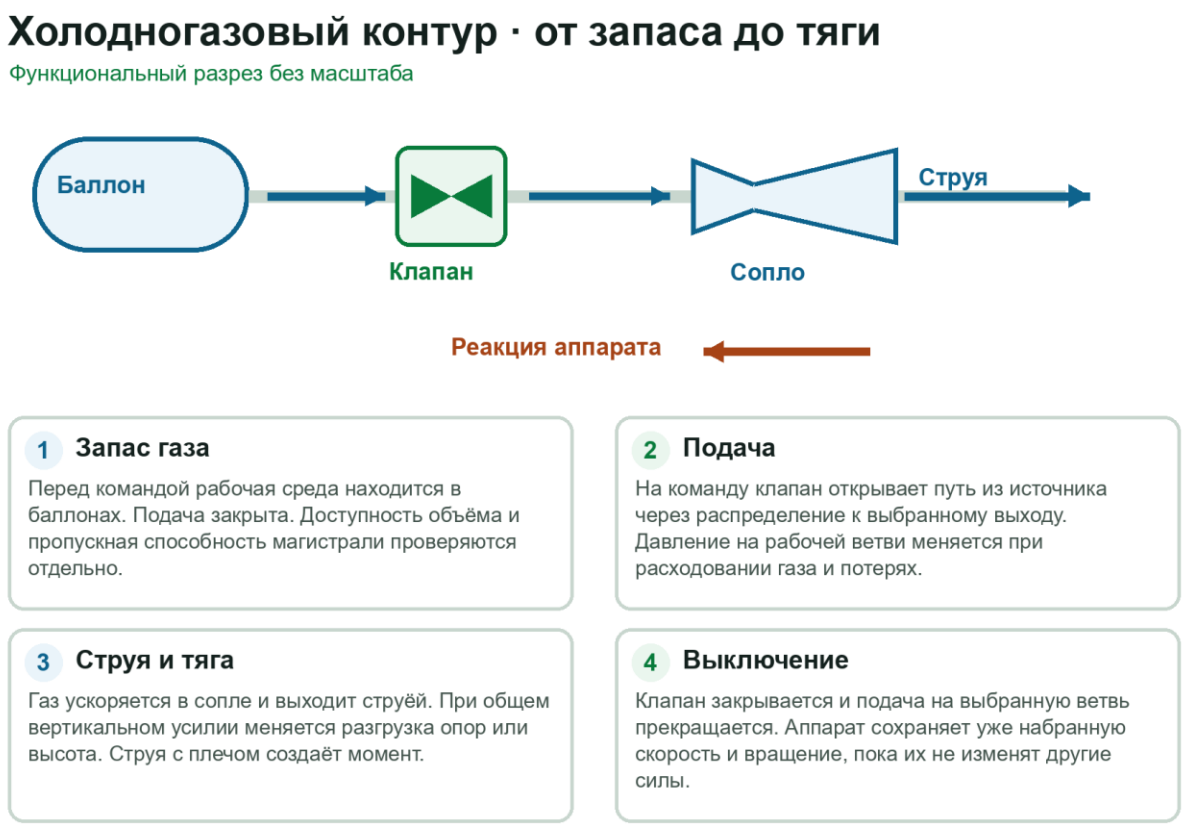

Cold-gas contour · from stock to traction. Functional incision without scale.

Knot or command	Flow, traction and action
Gas Reserve	In front of the team, the working environment is in the cylinders. The serve is closed. The availability of volume and throughput of the highway are checked separately.
Submitting	At the command, the valve opens the way from the source through the distribution to the selected output. The pressure on the working branches varies when gas is consumed and lost.
Sting and traction	The gas accelerates into the snot and comes out with a jet. With a general vertical effort, the unloading of supports or height changes. A jet with a shoulder creates a moment.
Turning off	The valve is closed and the serve on the selected branch is terminated. The device retains the already typed speed and rotation until they are changed by other forces.

For traction, the actual supply is significant, and for duration - a disposable reserve. The C6I 22 branches of the backup cone agree to one common exit, the wall of the regular entrance to the CAD is closed. The DEV44 did not confirm the main cycle of 5 m.

Sources

NASA. The principle of cold and gas traction

F97 · Tesla. Geometry of general filing DEV44

F16 · Tesla. Result of calculation and condition of the stands

Gas turbine engine · how to read the cut

At the gas turbine engine, the air comes from the outside continuously. The compressor increases the pressure, the camera adds energy, the turbine takes off part of the energy to the shaft rotation. The remaining flow is accelerating in the release. The CF700 fan branch adds a separate airway.



Gas turbine engine · how to read the cut. Direction of flow and communication of rotors.

Knot or command	Flow, traction and action
Entrance and compressor	The air intake leads the flow to the compressor steps. In front of the combustion chamber, the pressure rises.
Camera	In the hot zone, the supply of energy increases the flow temperature. The architecture of the chambers differs in engines.
Turbine and Wall	Hot gas gives some energy to the turbine. The shaft gives it back to the compressor.
Nozzle and stream	The release speeds up the remaining flow. The downward stream gives traction up. When tilted, the part of the tract becomes horizontal.

The incro of the report shows the reconstructed geometry. According to them, the composition and order of the plots are read, and the cost, loss of selection and the established traction are checked with individual sources.

Sources

NASA Glenn. turbojet engine work cycle

Cold gas in four car projects

Project	Path and purpose	Confirmation boundary
IMPULSE R06	The main, lifting and control branches are shown in the atlas. Publiners are placed in a separate system.	The CAD boarding package has silenced outputs. The staff cycle did not give a break.

Project	Path and purpose	Confirmation boundary
VEKTOR R12E / R12H	Vessels, distribution and lifting outputs. In the R12E, the opening of the initial speed and vertical thrust is counted.	R12H illustrates the layout. First contact in the R12E point-mass model and the structural landing analysis have different evidence bases.
Tesla C6l DEV44	The main T400 and additional AIR supply feed the vertical circuit in the calculation. The supply command affects available thrust and time to touchdown.	22 reserve branches converge to one exit. The joint of the staff entrance and the physical feed card are open.
ARGON V1 / V2	The choice of dispersed exits in the showcase shows the management of plumber and tilt. Side outputs in the scene conditionally set yawning.	The showcase demonstration and flight trajectories R06 use separate assumptions. The working map of real exits is open.

Sources

IMPULSE. Showcase R06

VEKTOR. Calculation R12E from the R12H showcase

ARGON. Stand of managers of nozzles

Forces, Thrust and Acceleration

Wheel dispersion, air phase, braking

Acceleration shows how fast the speed changes. The machine can still rise and already slow down if the resulting force is directed downwards. To explain the movement, first indicate what forces act in this phase and where their lines of action are directed.



Strength during wheel dispersal, separation and return to the support. The scheme explains the directions of force and is conditional.

Strength along the route and vertically

For an instant balance in the axes of the report X is directed along the route, Z up. Weight W = m·g is directed downwards. At an Earth's acceleration g ≈ 9.81 m/s2, the mass of 1,000 kg gives a weight of about 9.81 kN. In the future, the mass, speed and orientation relate to the specific moment of the selected scenario.

Component or communication	How to read in the report
Longitudinal acceleration	m·ax = Fshiny,x + Tx + Freight,x + Fl,x. Air resistance and rolling is directed against movement. When braking, the strength of the tire changes the sign.
Vertical acceleration	m·a_z = T_z + N + Freight,z − m·g. N = sum of vertical responses of supports. F-import,z is taken into account with a sign and can include a clamp.
Turn	Moment M = r × F. Vector r is directed from the centre of mass to the point of application of the force. The toes is the perpendicular distance to the power line. The same opposite forces can turn the apparatus with a low total power of transfer.
Incline of traction	If the resulting traction T is deflected from the vertical to the angle θ, its vertical share is T·cos θ and its horizontal share is T·sin θ. With the same traction, a greater tilt gives more effort to transfer and less to retain the height.

Dispersal on wheels

The electric motor transmits torque through the drivetrain to the wheel. The external longitudinal force acts at the tyre contact patch. The available force depends on wheel torque, grip, loads on the driven tyres and lateral force, for example when turning. Fan downforce increases tyre loading. Acceleration follows from the net longitudinal force. During steady transfer, drag offsets part of the driving force even while thrust is maintained.

Jet acceleration and control in the air

After losing contact, the longitudinal strength from the tyres disappears. The machine retains the already gained speed. The nozzle turns part of the energy of the working stream into a directional jet, and the reaction speeds up the device in the opposite direction. In cold-gas systems, the disposable traction changes along with the supply, pressure and opening of branches. At the gas turbine engine, the flow is created continuously. In the ejectors of Ludion, the primary stream involves the exterior air.

Conditional example. If the device weighing 1 000 kg no longer touches the site, the vertical thrust of 11.00 kN when neglected by other forces gives an excess of 1.19 kN and acceleration upwards about 1.19 m/s2. While the device is standing, part of the weight is perceived by supports. The value of the speed in the air depends on all the previous time of operation of the forces.

How to Compel the Numbers in Chapters

Acceleration in the moment, the speed of the first touchdown, the average speed of the route and the maximum height answer different questions. For comparison, fix the mass, initial speed, weather and road condition, axis and height rappers, as well as the boundaries of calculation. In the task of direct motion, the forces are set, and acceleration is obtained. In the inverse task, the measured or given motion determines the desired force.

Sources

Check-in view of reactive thrust and control

Design Principles in AI-CAD TextToCAD

Common bases, managed audits and repetitive audits

This report AI-CAD TextToCAD is a ligament of text TK, AI assistant, verifiable operations in native FreeCAD and engineering acceptance according to pre-selected criteria. The benefits are manifested when the requirements, details, geometry and results are tied to one revision.



Ai-CAD TextToCAD. Requirements and general bases are tied to the native model, inspection and production of materials.

Why this sequence is important

Principle	What an Engineer Gets
Setting with Measurable Criterion	Clarify the purpose, limitations and method of verification. One statement “works” turns into discernible checks of traction, gap, installation or landing.
General bases and parameters	The native branches share axes, datums and interfaces. A change to one assembly can be compared with another in the same coordinate system.
Version control	The file, SHA, Name parts, selected poses and circle of affected nodes are associated with the protocol. Pictures and calculation tables can be checked with the exact source.
Selection of engineering check	For access, you need a mounting path, for movement - positions or trajectory, for landing - power path and contact. The necessary types and reports are repeated after changes in the inputs.
Readiness of issuance	The reopening and visibility of the document is checked. At STEP-exchange, the geometry is further checked after import. Materials for the report are obtained from the same verified files.

Where AI saves re-work

The assistant helps to disassemble TC, formulate parameters, prepare repeated operations, collect a verification set of poses and arrange the result. FreeCAD stores an editable model. The checker selects the permissible parameters, evaluates the discrepancies and makes a decision. It was possible to trace specific examples in ten chapters, but a single increase in productivity for all projects was not measured here.

The ease of comparison is especially evident in the IMPULSE and ARGON through common bases, VECTOR through the mounting route, Tesla has a general serve, SG1262 through re-importation, and TURBOLEUT through reopening on the selected TextoCAD-Cranad-Cranad. Physical fitness data require individual measurements and confirmed counting inputs.

Sources

F137 · TextToCAD. Map of the routes of assistants and work with audits

F138 · TextToCAD. General rules of collaboration and recovery of results

F139 · TextToCAD. Project memory and rules of evidence

Landing and Suspension Behaviour

First touch, load transfer and stable support

When approaching the site, the pilot or regulator should reduce the vertical and lateral speed, align the device and maintain controllability. The first touchdown is the beginning of the load transmission. A stable support occurs later, when the device relies on the specified points, and the speeds and oscillations fade.

Sources

View sheet of all ten installed pendants and poles



Conditional wheel suspension. Position before touch, compression after touch and thievance. Shown elastic element, damper, levers and path of coverage reaction.

Levers or racks set the wheel movement relative to the frame. The elastic element stores part of the impact energy and returns it during unloading. The damper dissipates energy and reduces swinging. The rustle of the shaft depends on the kinematics of the links. One touch speed should be accompanied by a residue of the course, reactions on the supports and the duration of a stable support.

What can be seen	What Compared
Speed in the first contact	What point the first met the platform, its vertical and lateral speed.
Compression, withdrawal and reaction	Walk speed and speed, reaction on each support, peak load and repeated touching.
The Power Path	A tyre or heel, hub or rack, fastenings and further load-bearing structure.
Sustainable support	Number of loaded points, retention time, residual movement and swaying.

For devices with heels, strokes and rigid model supports, the composition of the units and the properties of the contact are indicated in their chapters. The conditional wheel scheme explains the general order of events.

IMPULSE

Electric car R06 AWD and RWD · road dispersal, AIR and research break

IMPULSE combines the road electric drive and the research contour of the separation. These systems act on the machine in different ways. On the road, electric motors create an effort in the stains of the tire contact, and fans change the clamp. In the research mode, the nozzles should unload the wheels and support the movement over the site. The regular versions of the AWD and RWD in the calculation of R06 remained on the ground.



IMPULSE. Overall view and open or exploded assembly from the native R06 AWD atlas.

Sources

F160 · Full engineering atlas of the product

F159 · Passport of native atlas and personnel

Showcase and fresh release check

The single showcase includes an AWD/RWD synchronous 3D flight, a point-to-point flight, nine steps of the device and an atlas. The new review of RU/EN lasts 2:19. Voiceover is tied to demonstration footage and telemetry.

Sources

Showcase of November 25

Open the point task mode

Anized review of AWD and RWD

Method or record for updating

Native FeedBack from November 24

IMPULSE · Technical and Economic Parameters

AWD / RWD · R06

The values of AWD and RWD are shown under the conditions of the original line. The R11B score covers the components and equipment. Full cost R06 is open. The HP-A stand series has the status of 0 out of 10 completed attempts.

Parameter	Value	Evidence
Length	4294 mm · both versions	CAD R06
Wheelbase	2700 mm · both versions	CAD R06
Escalation mass without pilot and nitrogen	AWD — 2091,04 kg · RWD — 1991,57 kg	R06 calculation
Calculated starting mass with gas and pilot	AWD — 2327,05 kg · RWD — 2227,58 kg	R06 calculation
0–100 km/h on electric traction · R06	AWD — 2,89 / 4,23 s · RWD — 4,34 / 6,74 s	Conditional scenario
Physical bench attempts HP-A	0 of 10 · both versions	Open
Time in the air, standard scheme	0 s · both versions	R06 calculation
Components with equipment, central assessment of the Russian Federation	AWD — 58.30 million ₽ · RWD — 51.84 million ₽	R11B archive
Cost of manufacturing R06	– · both versions	Open

Sources

Full passport in the catalog · 116 lines

Project showcase passport

Current showcase release

IMPULSE · CAD Views and Datums

Orthogonal photography and comparable physical scale

Спереди

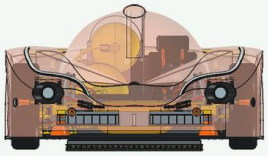

Слева

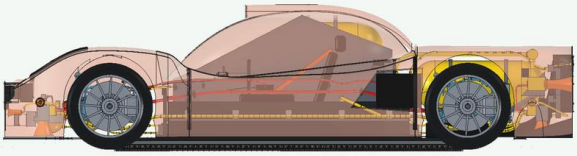

Front and left projections of CAD. On the sheet is designed one physical scale.

In the side form, compare the longitudinal places of axes and stern cassettes. The view from below helps to check which elements occupy the area under the bottom. For corners, the wheels go to the grid of R04 poses.

Сверху

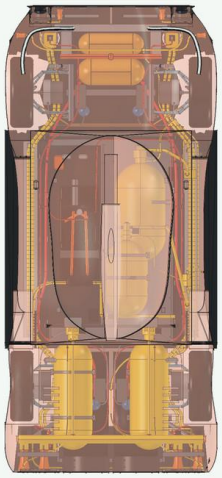

Снизу

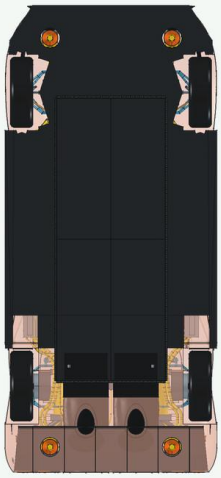

Upper and lower projections of the same stored revision. One physical scale is sustained.

Sources

F159 · Passport of native atlas and personnel

F160 · Full engineering atlas of the product

IMPULSE · Layout and Assemblies

R06 AWD

Продольное сечение

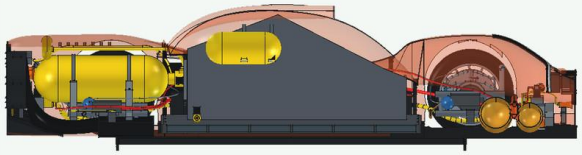

Поперечное сечение

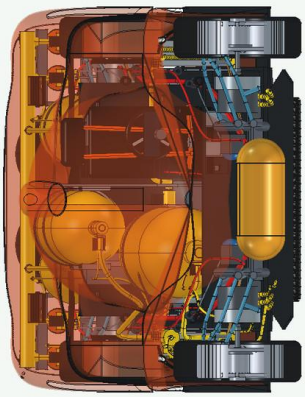

Prolongation and transverse sections of R06 show the installation boundaries of the parts.

Knot	Purpose and interfaces
Skeleton R01	The same 74 datums link axes, body points and mounts. After changing the track width, repeat the same configurations for both versions.
Battery and drive	The battery feeds the drive and auxiliary consumers. In the AWD, both axles work on the road, the RWD host is rear. The same body retains many layout restrictions.
Pallet Tract	Fan cassettes and air ducts work with outdoor air. The force of the press increases the available grinding when the tyres touch the coating.
Body and Packages	The longitudinal section shows how components sit next to each other along the vehicle. The transverse section shows package width, access to attachments and clearance for side components. Both use the section planes of the R06 atlas.

Sources

F159 · Passport of native atlas and personnel

F03 · Results of gas balance and R06 target scenarios

F87 · Closing the mechanism and limits of aggregates

IMPULSE · Airflow and Control

From the energy source to the response to the body

On the sheet of nozzles are the main, lifting and control exits. Their position shows where the research profile was supposed to be applied and the moment was to be given. On the second frame, the R06 landing package shows with the silenced outputs. This type allows you to check the placement of the collector and containers in the body. In the tested standard version, the sequence of reactive flight was not realized.

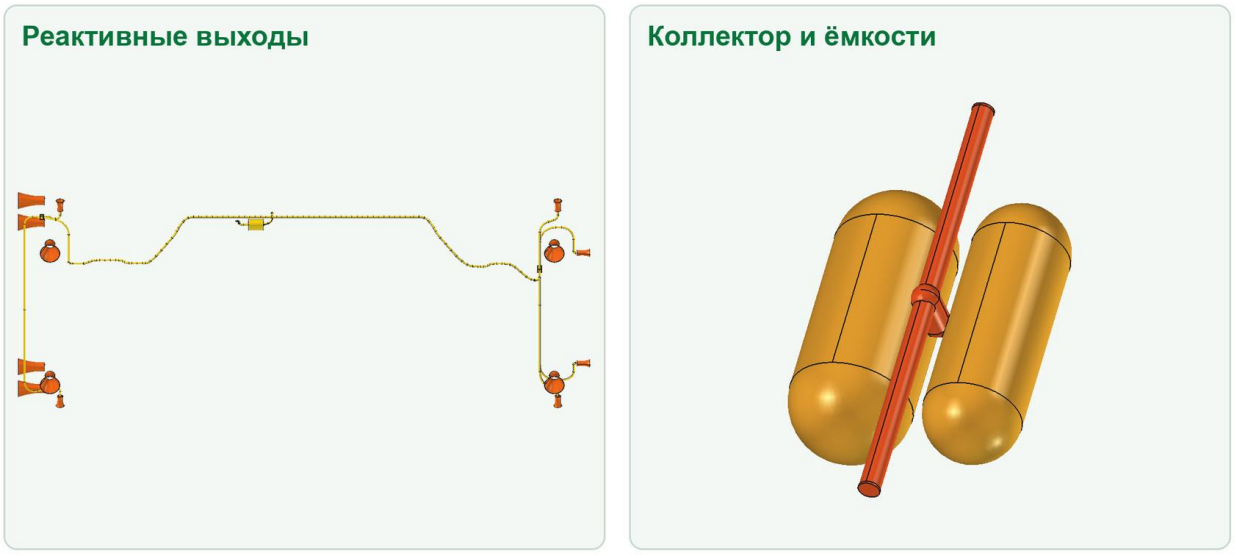

Reactive outputs and a silenced R06 landing bag.



Explaining the scheme of functional connections. The sizes of the flow and geometry of the channels are determined by the primary materials.

Sources

F03 · Results of gas balance and R06 target scenarios

F87 · Closing the mechanism and limits of aggregates

F88 · Why the wall check missed the conflict

IMPULSE · How It Works

CAD Close-ups and Functional Diagram

Pressure and reactive outputs



IMPULSE · Press and reactive outputs. Atlas R06 AWD. The links are conditionally shown.

The cassettes work for a pressure drop under the body. On the road, this increases the load on the tyres and changes the available grip. When the reaction is separated, the nosell reckoning on the body without reliance on the tyres.

The tested digital profile of the R06 did not confirm the regular sequence of jet flight.

Sources

Passport of native personnel and audit

Fan cassettes

Reactive outputs

IMPULSE · Showcase Screen

Reading System Behaviour and Telemetry

Examination of separation and control

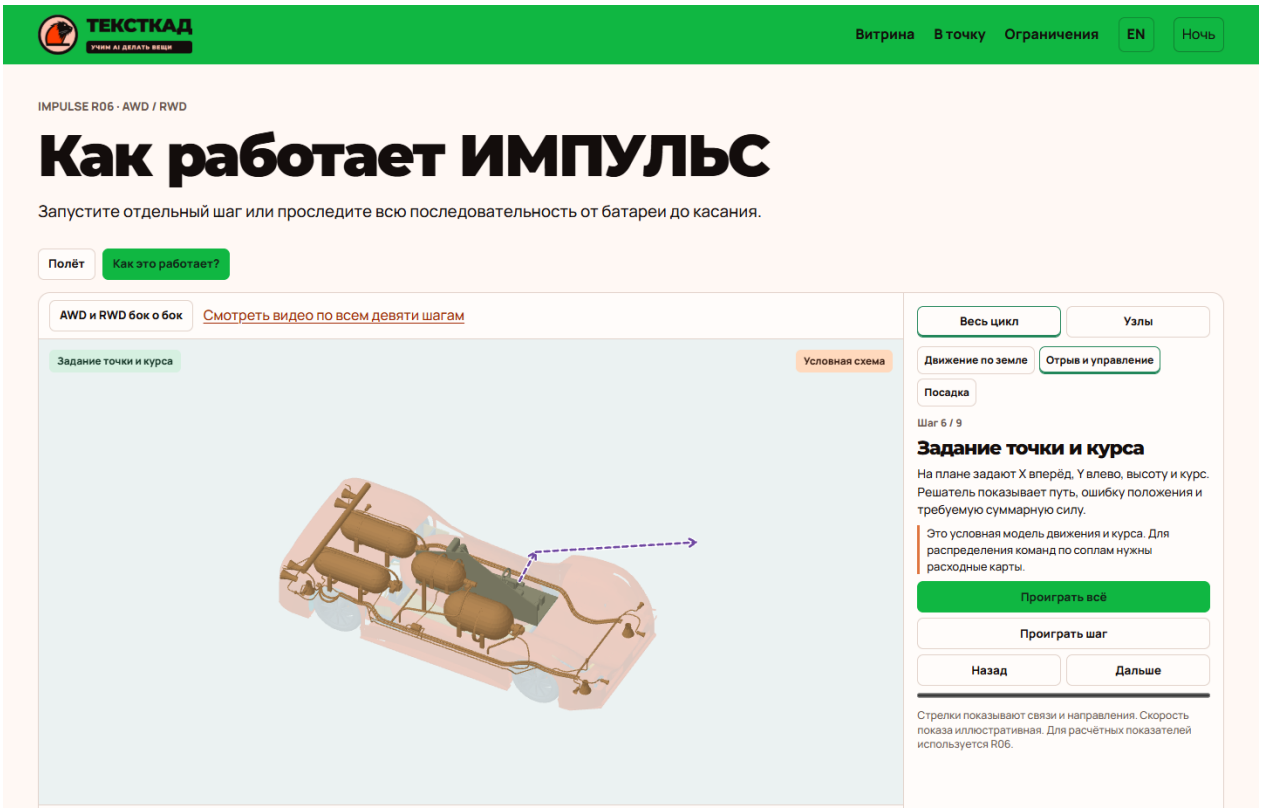

IMPULSE R06 · step 6 of 9. Picture of the local showcase on November 25, 2026.

First, read the name of the step on the right. According to the allocated highways, see which branch is active. Compare it with exits on the CAD frame and check each other where the showcase denotes a diagram or conditional mode.

Indications relate to the selected step or digital script of the showcase.

Sources

Open the local showcase

Indicative screenshot

IMPULSE · Forces and Motion

Longitudinal, vertical and angular motion

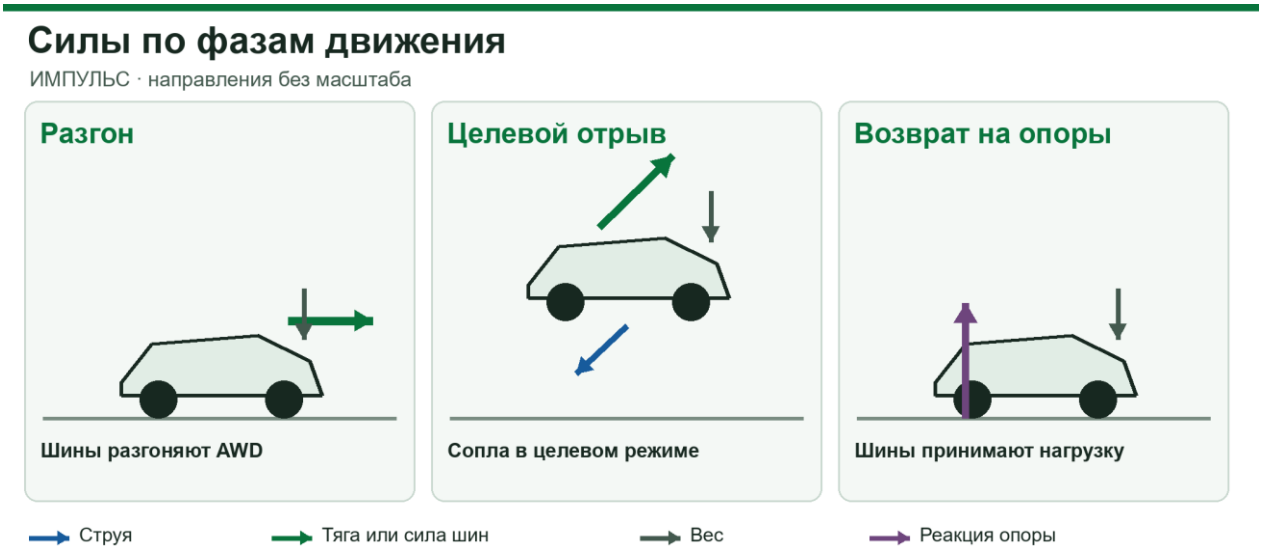

Functional drawing of directions. The length of the arrows is conditional. The physical status of each phase is refined in the text.

What is changing	How to read movement and strength
Longitudinal power	On the acceleration occurs in the contact of the leading tires with the road. After the loss of contact, the transfer begins with the already typed speed.
Vertical reaction	The downward jets would give strength up. The AIR press is on the road mode and increases the load on the support.
Moment	With sprawling outputs, the reaction difference can change the position of the body. This channel is considered in the target scenario with a separate characteristic of traction.

The project program 5 m / 25 m and 2.646 s describe the target. The R06 for both schemes gave 0 m and 0 s. Even in a favorable assessment with a conditional combination of volumes, the final feed remained lower than the required maneuver for the chosen end. The balance of gas and the available supply limit different parts of the same attempt.

Sources

F88 · Why the wall check missed the conflict

F90 · Inventory and supply compatibility

F110 · Atlas IMPULS R06

IMPULSE · Landing Gear and Load Paths

Load, Payment and Repeatability of AI-CAD

Подвеска в раме

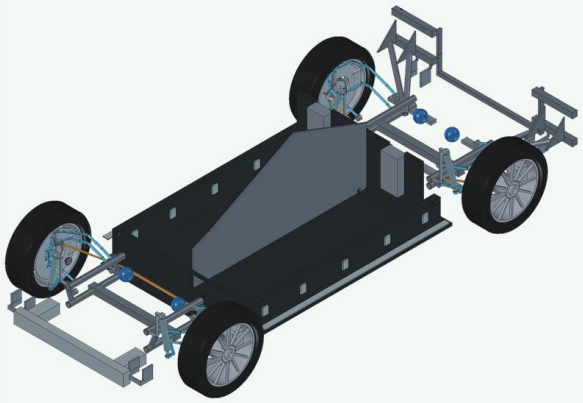

Кассеты AIR



Installed suspension and AIR cassettes. The scale was selected to read each node.

Inspection section	Loading Path and Conditions
The Power Path	From the contact spot, the reaction passes through the graduation and fist to the guide levers, fingers and frame. The damper characteristic should be associated with the real move.
Rear mounts	The four fingers enter the t101/T102 cavities. The check of the walls gave zero, because the conflict is in a dry geometric area, and not in the wall material.
Repeated verification	The R04 has 64,656 paired checks in selected poses. Preservation of these poses allows you to compare the correction of both rear branches.

Design in AI-CAD TextToCAD

Both branches are reasonable to keep from the total dimensional skeleton. Otherwise, changing the rivet, hinge or tank position will easily split between AWD, RWD, illustrations and checks. Criteria of wheel movement, maintenance and separation are set separately, so the correction of the collision is not automatically transferred to the traction assessment.

The common master in R01 has 74 datums. In R04, 64,656 pairwise checks were run at selected poses for both track widths. Rechecking R03 found four rear-suspension pins inside the T101/T102 bore envelopes. TextToCAD can tie a change to the shared skeleton and repeat the same poses. This isolates the problem to a specific pair and pose and makes it possible to recapture the changed revision.

IMPULSE · Verification and Evidence

Large plans and terms of the next set-off

Батарея и тепловая ветвь

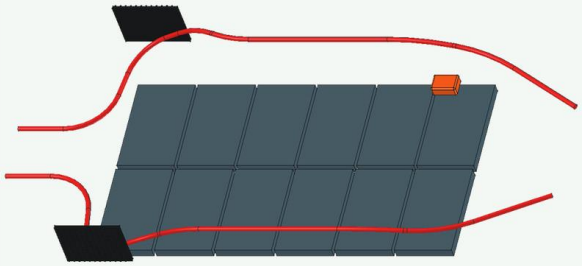

Рычаги и опоры в сборе

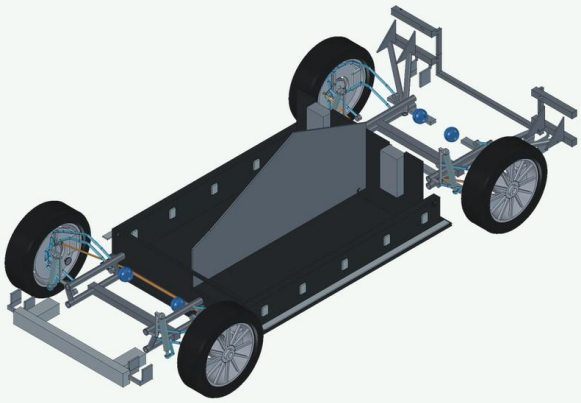

Close-up nodes from the native series. The angle and scale of each frame are selected for reading the details.

Verification	Result, area and required continuation
Closing of Kinematics	The saved mesh contains 4 032 positions and a small closure. The inspection should be repeated with passport restrictions SHRU, because the geometric angle in one zone reached 75.61 °.
Rear cavities	For four fingers, both the wall and the volume of employment are checked. Zero contact with the wall was accompanied by the entrance to the encroaching. The next audit should check both areas for the same postures.
Gas Balance	In a favorable assessment, the final feed of 30,87/34.03 kg/s was lower than required 63.94/61,20 kg/s for AWD/RWD. To solve it, it is useful to keep at the same time stock, pressure and supply shortage.

For the next standings, the set and the mass are first fixed. Then the mounts and running gear are checked, after which the pilot stand should give synchronous data on the stock and supply.

Sources

F03 · Results of gas balance and R06 target scenarios

F87 · Closing the mechanism and limits of aggregates

F88 · Why the wall check missed the conflict

F90 · Inventory and supply compatibility

F110 · Atlas IMPULS R06

IMPULSE · Reading the Showcase

Viewing and sources

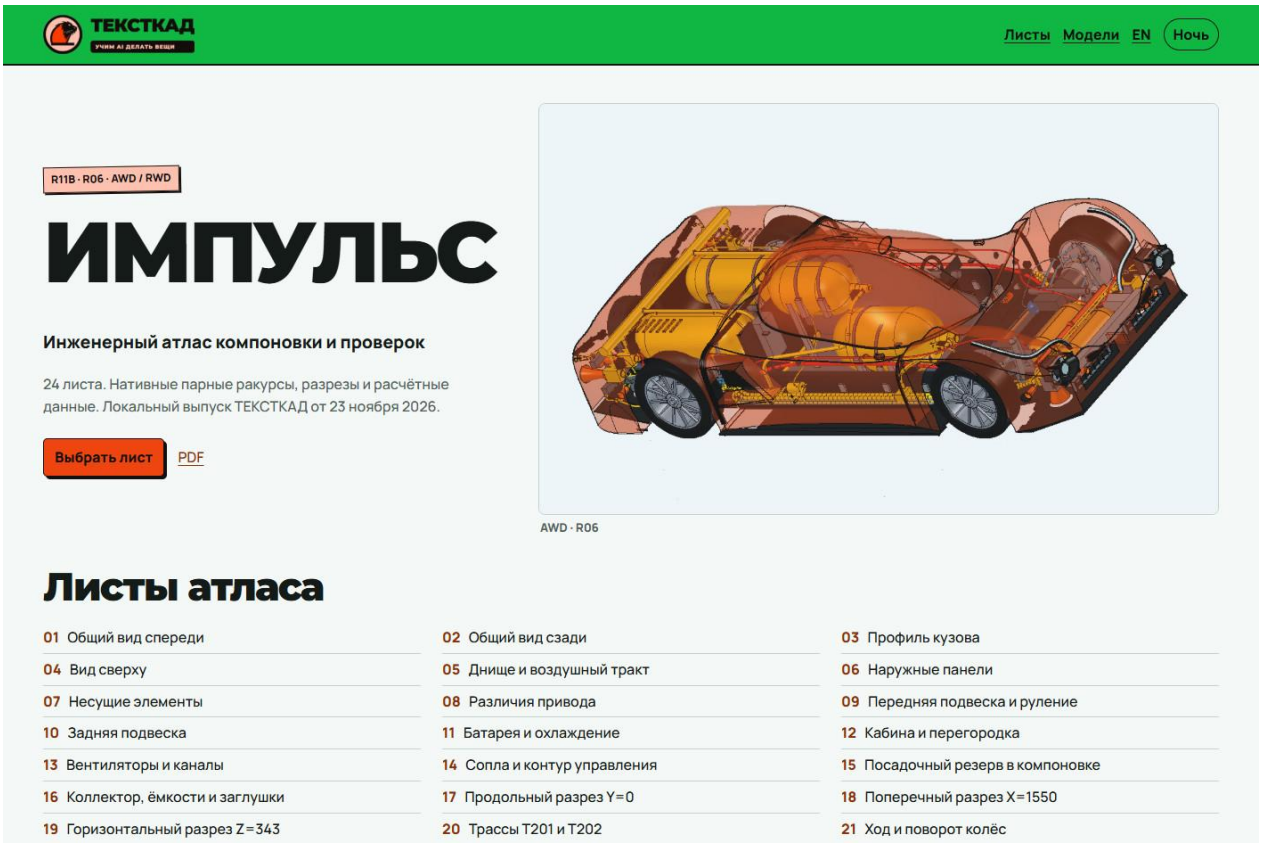

The starting screen of the design showcase "IMPULSE". An interface that opens by link from this section is shown.

Screen or document	What to watch and what to check with
Start with AWD/RWD	On the sheets of the atlas, compare the same common types. Select the orange R06 AWD, then go to body cuts.
Open cassettes and landing bag	On separate sheets, trace the air channels and the place of the landing reserve. Look for plugs and boundaries of service space.
Coinve the numerical result	Open the RESULTS R06 and the feed check. The values from the frame of the target and the actual output of the model are easy to distinguish by the names of the series and the columns of the result.

Sources

F110 · Open the design showcase

F160 · Full engineering atlas of the product

F03 · Results of gas balance and R06 target scenarios

F87 · Closing the mechanism and limits of aggregates

F88 · Why the wall check missed the conflict

F90 · Inventory and supply compatibility

F110 · Atlas IMPULS R06

Results and conclusions

The road AWD and the survey branch of the separation require different conditions of the set-off. For the first critically confirmed mass, running and ground modes. For the second open feasible feed and configuration of supports, which must withstand the return.

IMPULSE · Development History

Decision chronology and separately issued checks

How the project has changed

On 19 November, the R11B audit recorded 1,492 objects in the original AWD assembly. The calculated mass was 2,280.119 kg for AWD and 2,180.753 kg for RWD, against a target of 1,700 kg. A lighter version was proposed.

R01 linked the branches through a common master with 74 datums. Changing the front track width revealed wheel-to-body contact. R02–R04 revised the kinematics and several parts groups. R04 covered 64,656 pairwise checks at selected poses for both track widths.

R05 closed the T202 joint in CAD. In the R06 added a landing bag, but its exits remained silenced. Showcase and atlas on 24 sheets allowed to compare the branches. The expert questionnaire was expanded from 50 to 61 questions after the reconciliation of the conflict magazine.

Sources

F01 · R&A R11B from 19.11.2026

F02 · Manifesto of Native Assemblies and Evidence R06

Sources

F110 · IMPULSE. AWD/RWD Atlas and Power Systems

F03 · IMPULSE. Results of regular and target series R06

IMPULSE · Results and Limitations

R11B → R06 · AWD and RWD

The standard remains on the ground.

On the regular parameters, both branches show 0 s in the air and 0 m of flight. Shown in the showcase 5 m of climb, 25 m range and 2,646 s describe the target scenario. The calculated useful supply of the new package is 2.80 kg according to the accepted criterion when assessing the need 34-41 kg for the selected profile.

The final TK covers 61 requirements and 18 indicators. V1 combines the track AWD and a separate research stand on RWD geometry. V2 is designed for sprint, V3 for a track with an active pressor. The repeatability criteria for V1 are at least 9 successful cycles out of 10 and a return to readiness in 20 minutes or faster.

What Remains Open

The four upper fingers of the rear suspension are included in the enveloping inner cavities T101/T102. The check only at the intersection with the wall missed the conflict. The primary protocol indicates tumble suspension rivets, while the expert text mentions the steering ray.

The nearest decision

By December 7, 2026, the plan proposed the choice of volume of the first stage, by March 1, 2027 - a decision on the study of separation. The V1 estimate to this milestone is 51.0 million ₽. Grounds for the solution are the corrected statement of conflicts, the confirmed mass and the results of the stand.

Verification of materials on November 24. 62 of the 62 records of the manifesto R06, SHA-256 of the three FCStd and the integrity of the archives are verified. In both PDF of variable TK of 34 pages.

Sources

F03 · Results of gas balance and R06 target scenarios

F04 · Reply of the corrected expert questionnaire R02

F05 · Independently checked output TK 24.11

F06 · Variable TK R06 in Russian

IMPULSE · Data and Method

R11B → R06 · AWD and RWD · Primary Materials

Additional checking the primary files clarifies what exactly changed between R04, R06 and the TK option of November 24. High accuracy of the mechanism, the absence of selected intersections and the release of the agreed document - different results; none of them itself closes the operability of the product.

Closing the mechanism and limits of aggregates

In 4032 positions, the maximum incoction of the circuit is 1.14×10−13 mm, but the maximum difference in the angles of the left/right wheel is 3.322 °. On the rear axle, the calculated angle of SRUS reaches 75.61 °. This is a specific reason to request a record for a real unit, even with a geometrically closed scheme.

A discrete kinematic model has been tested. the admissibility of the working angle, the resource, friction and loads from this file do not follow.

Where to verify — pose_count · max_closure_error_mm · maximum_LR_angle_difference_deg · ranges.AWD_1640.RL.cv_inboard_angle_deg.

Sources

F87 · closure_grid.json

Why the test on the walls missed the conflict

For each of the four pivot pins, the full volume of 34,023.448 mm³ lies inside the geometric reference for the straight internal bore. Intersection with the wall and liner material is zero. This check concerns the unchanged R03 assembly and explains why the rear supports were later reopened as issues in R04/R06.

The witness sets the occupied geometric area, not a useful capacity or tolerance of the vessel. Zero contact with metal does not allow the placement of an extraneous part inside.

Where to verify — scope · unchanged · results[pin=ArmPivot_RL002/RL003/RR002/RR003].common_with_liner_inner_straight_bore_mm3 and common_with_wall_material_mm3.

Sources

F88 · stock_upper_tank_void_AWD.json

Total AWD and RWD defect

For 18 selected rear host facilities, including T101/T102, liners, SuspensionRail004-007 and ArmPivot_RL/RRR fingers, BRep are the same and AWD/RWD accommodation. Consequently, the selection of RWD does not itself eliminate the detected layout defect and does not give grounds to take the rear power scheme.

The comparison is limited to the specified details of the original cut. it confirms the tolerance of the comment between the branches, and not the entire assembly.

Where to verify — 18 top-level objects · fields AWD/RWD.brep_sha256, placement_sha256, identical.

Sources

F89 · stock_rear_awdrv_equivalence.json

IMPULSE · Evidence Review

R11B → R06 · AWD and RWD · Primary Materials

Inventory and supply compatibility

In a favorable assessment with a conditional combination of existing reserves, the ideal lossless passage and a 15% landing reserve, the final available feed is 30.87 kg/s at AWD and 34.03 kg/s in RWD against the required 63.94 and 61.20 kg/s. joint_bound_pass=false in both branches: the increase in the total capacity did not allow the simultaneous balance.

This is an upper assessment of opportunities in knowingly favorable assumptions. it maintains a negative inference for a proven scheme and is not a selection of new equipment.

Where to verify — scope · variants.AWD/RWD.joint_bound_pass · best_possible_local_flow_at_inventory_pressure_kg_s · needed_landing_end_kg_s.

Sources

F90 · pressure_tradeoff.json

TK has changed the method of comparison and the order of the decision

G0 offers V1 s ground-based AWD without side vessels and a separate RWD stand. for +20% acceleration, rule B is selected, then usually A is left an internal target. The decision on December 7 is conditional: the materials of the A05 and A03 are expected on December 10 and 15, so the document directly requires either to record undoor conditions, or postpone the closure of the G0.

This is a draft procedure and financing: G0 - up to 3.50 million ₽, G1 - 28.00 million ₽ ± 15%, G2 - preliminarily 19.50 million ₽. Dates and amounts are not a signed permit or contract.

Where to verify — gates[id=G0].ru[0..3] · gates[id=G1/G2] · items[id=A01/A02/A03/A05].

Sources

F91 · plan.json

What is really accepted when releasing

The PASS recorded on 24.11 covers the archive of 23 records, 10 indexed sources, 61 requirement IDs and 18 metric IDs. Both extracted language PDFs have 34 pages. Token coverage of 0.99922/0.99933 verifies text transfer during release. Engineering thresholds are a separate check.

The file does not contain the committee, the V1 selection protocol or the results of physical tests. The status of the document cannot be transferred to the product.

Where to verify — status · date · question_ids · target_ids · indexed_local_sources · from_extracted_archive.RU/EN.

Sources

F05 · RELEASE_VERIFICATION.json

Condition of the next decision

To close the next decision, a dated G0 s protocol with a selected mission, a +20% rule, a list of permitted works and the signatures of the Chairman/Technical Director with independent security consideration is required. Technical comments on the rear pillars should receive a new file/SHA and loaded checks; the geometric success of R04 and the packaging PASS R06 do not replace this.

VEKTOR E-26

VEKTOR E-26 · installation R12E, assembly R12H and landing R12I

VEKTOR explores a short jump of a single-seater car at the input speed. The wheels disperse the car, and the reaction of the jet changes the height. After returning to the cargo, the cargo should take tires, racks and frame. In the materials, these stages are calculated separately. The R12H shows the mounting device, the R12E describes the flight and the service route, the R12I - landing.



VEKTOR E-26. Overall view and open or exploded assembly from the native R12H atlas.

Sources

F162 · Full engineering atlas of the product

F161 · Passport of native atlas and personnel

Showcase and fresh release check

One set of RU/EN connects 26 R12E–R12I scenarios, an inspection of R12J, a point-to-point flight, an atlas and a library. When the R12I landing and the flight R12E shows, different calculated masses and countings are saved.

Sources

Showcase of November 25

Open the point task mode

Autonomous Showcase E-26

Method or record for updating

Native FeedBack from November 24

VEKTOR E-26 · Technical and Economic Parameters

CAD R12J · R13 calculation series

Dimensions are related to the CAD R12J. The mass, acceleration, time in the air and touch are given according to the R13 series. HOLD means the touch criterion remains open. The road supply and estimate are related to their scenarios.

The passport includes the unified R13 study. Model input mass at start is 1,516.5 kg and calculated airborne time is 1.428 s. The 3.42 m/s downward touchdown and structural constraints retain HOLD status.

Parameter	Value	Evidence
Length / width / height	4 792 × 2 080 × 1 459 mm	CAD
Mass of the empty apparatus by statement	1 331,9 kg	Calculated
Mass at the start	1 516,5 kg	Model input
0–100 km/h on electric	2,808 s	Calculated
Time in the air	1,428 s	Calculated
Vertical speed of touch down	3,42 m/s	HOLD
Power reserve without press	216 / 164 / 110 km	Calculated
Valuation of the cost of one prototype · RF	₽6.71 million	Cost estimate
The cost of one test cycle	—	No measurement

Sources

Full passport in the catalog · 86 lines

Project showcase passport

Current showcase release

VEKTOR E-26 · CAD Views and Datums

Orthogonal photography and comparable physical scale

Спереди



Слева

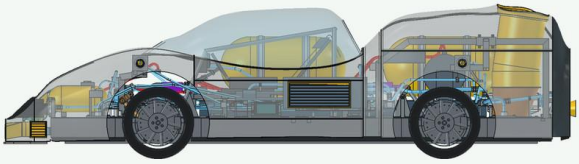

Front and left projections of CAD. On the sheet is designed one physical scale.

The side view connects the wheels and towers, the view from above - the opening of the cabin and the length of the aggregate zones. Direct views do not show the trajectory of the cassette extraction. It is built as a continuous mounting route in the R12E.

Сверху

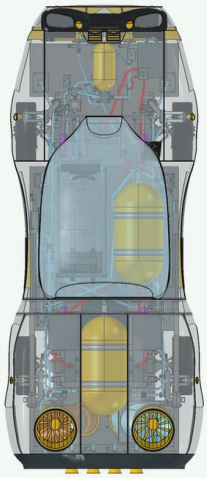

Снизу

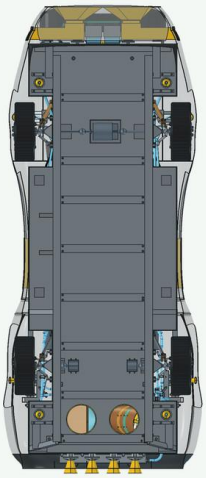

Upper and lower projections of the same stored revision. One physical scale is sustained.

Sources

F161 · Passport of native atlas and personnel

F162 · Full engineering atlas of the product

VEKTOR E-26 · Layout and Assemblies

R12H



Comparison of open electrical units R12H.

Knot	Purpose and interfaces
Rama	Towers and cross-sections connect the points of application of forces from the running and installation sites. Installing a support in the assembly sets the shoulders of the levers in relation to the wheel.
Battery and Cooling	In the open form, modules and service areas are distinguishable. On the next frame you can see the elements of the traction and heat branches. Their placement affects access and layout.
Service cassettes	R12E individually tested the continuous trajectories of two cassettes. Minimums of 0.541 and 0.526 mm are left for 0.041 and 0.026 mm after deduction of 0.50 mm. This sensitivity should be taken into account when changing the tray, fasteners and admission.
Driver	Photos and CAD with an open lantern show the access zones to the cabin. The inspection of the R12J chair relates to another engineering audit and is highlighted in the archival results.

Sources

F161 · Passport of native atlas and personnel

F09 · AIR R12E: continuous service and tool

F10 · R12I: loads, gaps and landing

VEKTOR E-26 · Airflow and Control

From the energy source to the response to the body

The pneumatic set and channels under the bottom should be read separately. On the form of pneumatics, containers, fittings and places of release are visible. On the form of channels and seals can see the working area of the pallet system and its joints. The R12E calculation requires an placed vertical reaction. A full valve map, working characteristics of all joints and executive moments require their data.



Pneumatic units and R12H air channels. Indicated installation device.

Потоки и реакции

ВЕКТОР E□26 · функциональная схема

Система сжатого воздуха

Сосуды → Распределение → Управляемая подача → Вертикальная реакция

Дорожный режим

Батарея → Тяговый привод → Колесо → Реакция покрытия

Порядок и направление связей. Схема не задаёт геометрию каналов.

Explaining the scheme of functional connections. The sizes of the flow and geometry of the channels are determined by the primary materials.

Sources

F09 · AIR R12E: continuous service and tool

F10 · R12I: loads, gaps and landing

F92 · Digital acceptance AIR and missing stand

VEKTOR E-26 · How It Works

CAD Close-ups and Functional Diagram

Subdigent tract and gas reaction



VEKTOR E-26 · Submarine tract and gas reaction. Atlas R12H. The links are conditionally shown.

The tightness of the edge affects the difference under the bottom. In the contour of the separation, the vertical component of the reaction unloads the wheels. When the body is tilted, the direction of the resulting and the lifting reserve change.

R12H shows the placement of nodes. Masses and tolerances of different calculation scenarios are read according to their own protocols.

Sources

Passport of native personnel and audit

Channels and seals

Pneumatics and nozzles

VEKTOR E-26 · Showcase Screen

Reading System Behaviour and Telemetry

Air and press in 3D lesson

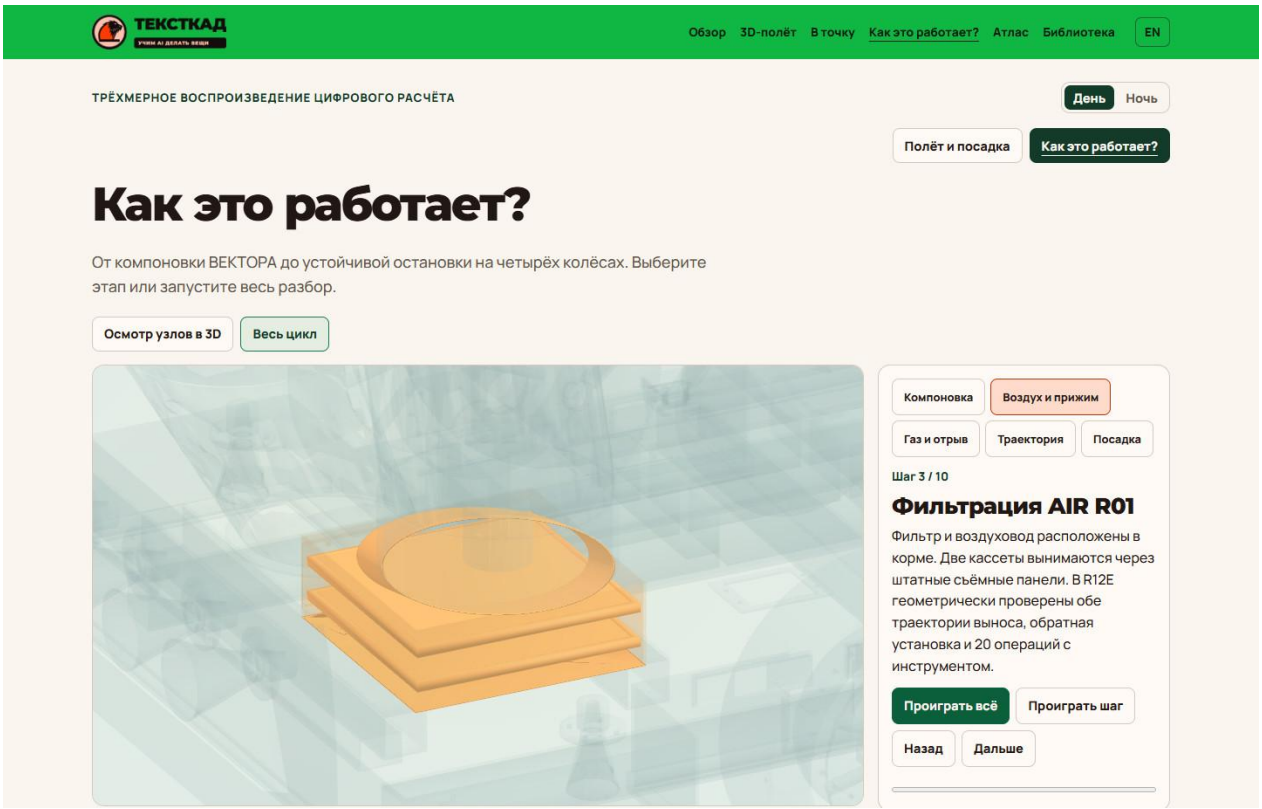

VEKTOR · R12J, filter sheet / R12E check. Picture of the local showcase on November 25, 2026.

Compare the title of the step with the illuminated part of the model. On this screen, it is important to track the position of air equipment relative to the bottom before moving to the gas breakout mode.

Indications relate to the selected step or digital script of the showcase.

Sources

Open the local showcase

Indicative screenshot

VEKTOR E-26 · Forces and Motion

Longitudinal, vertical and angular motion

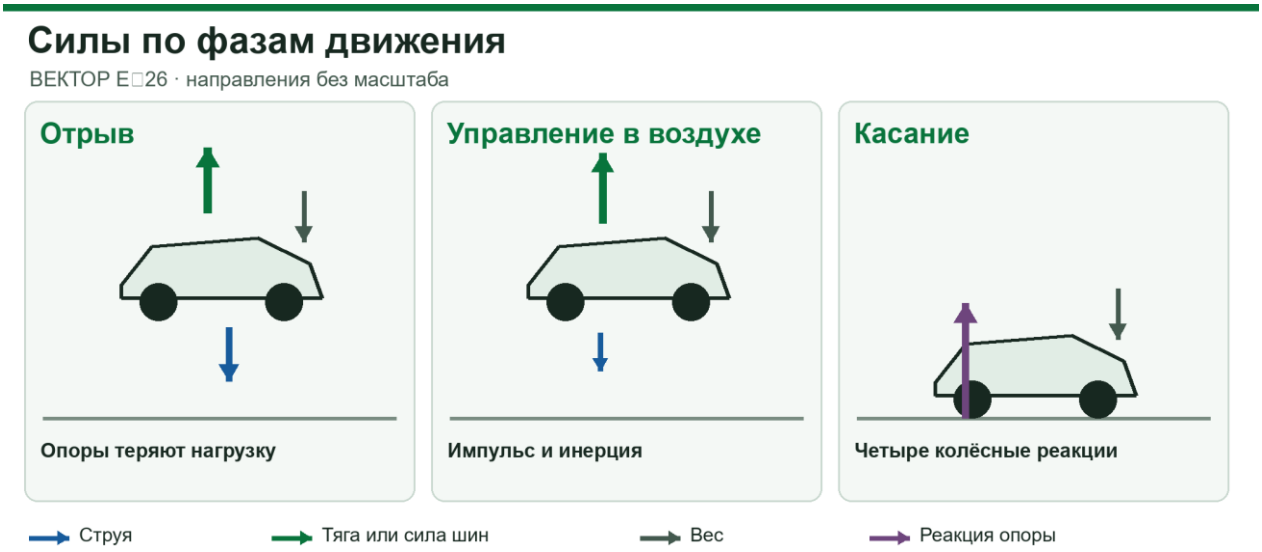

Functional drawing of directions. The length of the arrows is conditional. The physical status of each phase is refined in the text.

What is changing	How to read movement and strength
Acceleration	In the flight scenario, the car already has an input speed. The longitudinal strength of the tyres is taken into account only until the separation and after touching.
Rise	In the first moments, the vertical reaction is more weight. With the consumption of the reserve, the available strength changes and the decrease begins.
Inclination and Sustainability	R12E describes the movement of the calculation point. To infer a lynx, roll and a touch order, a connected model of the body and supports is needed.

R12E gave 1,663 s without support, height 0.926 m and transfer of about 46.19 m. These values refer to the calculated point. The masses used when touching R12E and R12I differ on 91.6 kg, so the same movement from the separation to the stop has not yet been built on these two records.

Sources

F92 · Digital acceptance AIR and missing stand

F111 · VEKTOR R12H Showcase, Calculation R12E

F117 · Native CAD build for shooting. VEKTOR_E26_R12H_LANDING.FCStd

VEKTOR E-26 · Landing Gear and Load Paths

Load, Payment and Repeatability of AI-CAD

Рама и подвеска

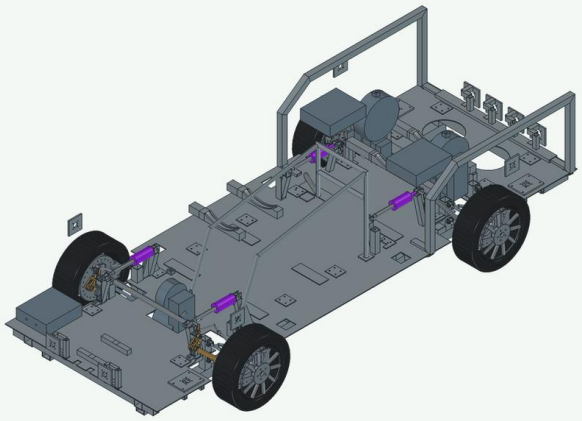

Верхняя проекция

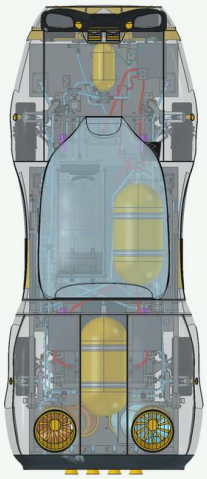

Installed running and view from above. The gaps and loads are separately checked in the R12I.

Inspection section	Loading Path and Conditions
The Way of Loads	The steppe and the fist give their efforts to the levers and the tower. The course of the rod is different from the turn of the wheel from the shoulders and angles of installation.
Condition R12I	Six scenarios gave a stable digital support. A high local peak in the rod estimation and gap of −0.018 mm with combined influences left the power assembly on HOLD.
Closing interfaces	You need one mass, one configuration and synchronous reactions. Verifications R12E with 20 approaches of the tool and R12I with 6 173 checks of pairs can be repeated after agreeing on the composition.

Design in AI-CAD TextToCAD

For VECTOR, it is important to link rare and daily operations in one body. The cassette should be removed in real order and with a tool. The rack should be checked in the range of running and forces, in which a meeting with the site is possible. The proposed general passport should be tied by a service, flight and landing to one complete set.

In the R12E digital route of both cassettes takes into account 20 proven approaches of the tool. The R12I has 6 173 checks of steam with a direct steering wheel and a separate assessment of loaded joints. AI-CAD TextToCAD helps to save native parts, selected stages of movement and verification parameters along with the audit. Such a set allows you to repeat exactly the mounting route on which the small gap is obtained, and detect incompatible inputs before the combination of the flight and landing series.

VEKTOR E-26 · Verification and Evidence

Large plans and terms of the next set-off

Открытая кабина и агрегаты

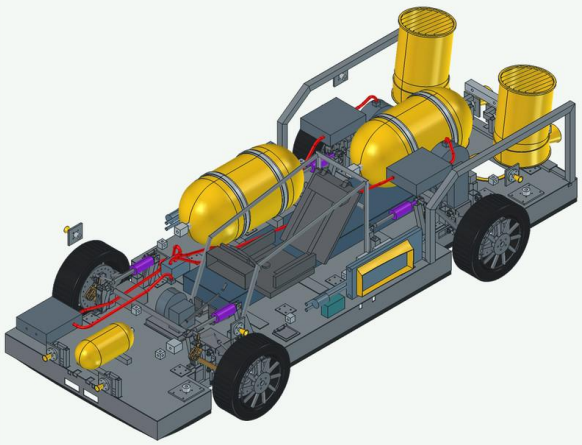

Ходовая и точки крепления

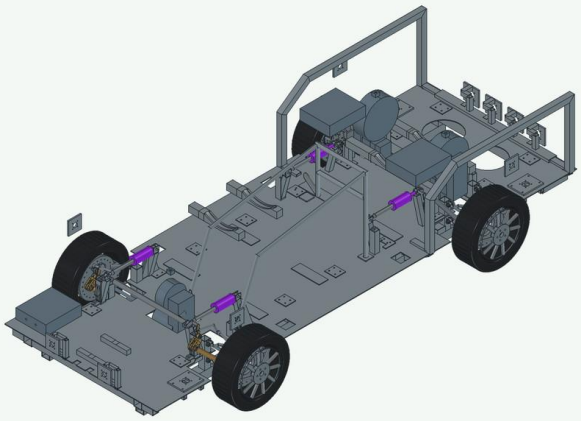

Close-up nodes from the native series. The angle and scale of each frame are selected for reading the details.

Verification	Result, area and required continuation
Service Route	R12E showed 20 proven approaches of the tool. The balance of the gap is 0.041/0,026 mm after admission should be checked with each change of the tray or fastener.
Loaded rear hinge	The nominal 2,400 mm turned into −0.018 mm in a combined settlement mode. This is the reason to check the properties of the model and the real deformations before the conclusion of the permissible course.
Chair R12J	In a separate check, 387 pairs and four approaches of the tool. The gaps of 88,00 mm to the lantern and 71.76 mm to the steering wheel are classified in this configuration.

The evidence packet should link the service, reactions and landing with one complete set, including the mass at the touch boundary. For the power part, the initial postures, external efforts and material are preserved.

Sources

F09 · AIR R12E: continuous service and tool

F10 · R12I: loads, gaps and landing

F92 · Digital acceptance AIR and missing stand

F111 · VEKTOR R12H Showcase, Calculation R12E

F117 · Native CAD build for shooting. VEKTOR_E26_R12H_LANDING.FCStd

VEKTOR E-26 · Reading the Showcase

Viewing and sources

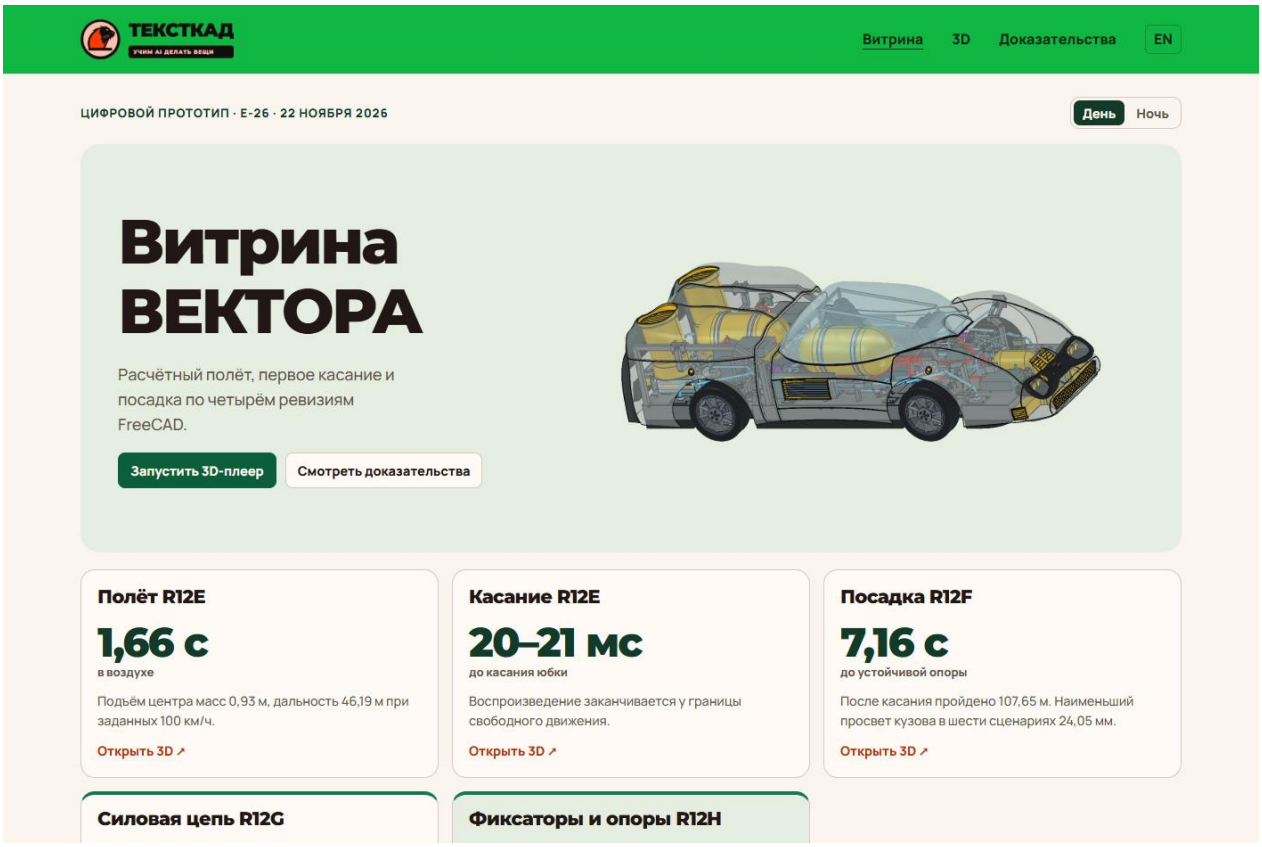

The starting screen of the project showcase "VEKTOR E-26". An interface that opens by link from this section is shown.

Screen or document	What to watch and what to check with
Shower and Fixators and R12H supports	Open the overall view, then open the power layout and find the supports mounting points. For the installation route, go to the R12E protocol.
Flight R12E and R12E Touch	Specify where the height, time and range are counted. Check the events by flight.json and the geometric stage on the native R12H file.
Landing Protocol	Check separately successful digital contact, local voltages and a morune hinge. These testimonies answer different engineering questions.

Sources

F163 · Open the design window

F162 · Full engineering atlas of the product

F09 · AIR R12E: continuous service and tool

F10 · R12I: loads, gaps and landing

F92 · Digital acceptance AIR and missing stand

F111 · VEKTOR R12H Showcase, Calculation R12E

F117 · Native CAD build for shooting. VEKTOR_E26_R12H_LANDING.FCStd

Results and conclusions

The digital geometry of the service route and flight traffic are confirmed in their productions. The next system result depends on the information of the inputs R12E/R12I and the inspection of loaded mounts.

VEKTOR E-26 · Development History

Decision chronology and separately issued checks

How the project has changed

The R11P included 2 223 bodies and 5 016 objects. In the transfer report, 6 317 records of three inserts were checked, 70 files remained out of the inscriptions. At the start of the analysis, there were 27 nominal pairs and 846 triggers on conditional wheelbarrows.

The R12B allowed the tape to be removed from the filter, but the direct extraction from the car was blocked. R12C-R12E brought the route through the stern panels to the removal and return of both cassettes with fasteners and parking.

R12E modeled the flight, R12F-R12I changed landing racks and power connections. After 72 intersections in R12G, the geometry was corrected in R12H and R12I. In the R12J there was a whole chair. Experts have proposed a ground base with a removable landfill as one of three options.

Sources

F08 · R11P Source Audit

F09 · AIR R12E: continuous service and tool

Sources

F111 · VEKTOR. Initial forces and R12E result

F09 · VEKTOR. Service route R12E

F10 · VEKTOR. R12I Landing Series

VEKTOR E-26 · Results and Limitations

R11P → R12J · one body

The service route of the two cassettes is checked.

In the R12E for two continuous routes, gaps are obtained 0.541 and 0.526 mm. After admission of 0.50 mm remains 0.041 and 0.026 mm. In CAD, 20 of the 20 proven approaches of the tool are available.

In the R12I, six given landing scenarios reached a stable support. With a direct steering wheel, 6 173 checks of pairs were performed. The calculation of the power scheme gave up to 4 229 MPa in the accepted rod production. The nominal 2,400 mm in the rear hinge pass into −0.018 mm with joint loads.

The R12J chair has passed 387 checks of pairs and four tested tools. The geometric gap to the lantern was 88.00 mm, to the steering wheel - 71.76 mm. Acceptance of ergonomics and fasteners requires separate evidence.

What Remains Open

When touched with R12E and R12I, masses differing in 91.6 kg are used. It is not yet possible to combine two runs into a through cycle. The range of 579.36 km in the early battery assumes about 51 Wh/km when using 95% of its nominal energy. Road losses are to be checked.

The nearest decision

Bring the flight and landing to one composition and repeat the calculation of the loaded assembly. In the TK, 54 expert responses relate to 35 indicators. The intervals of 72 hours, 14 days and 15-60+ days describe the proposed plan.

Materials checked on 24 November. The checks covered 42 of 42 R12I files, the native R12I and R12J hashes, and 6 of 6 design-brief files. Both language versions of the PDF contain 22 pages.

Sources

F10 · R12I: loads, gaps and landing

F11 · R12J: chair and saved SHA

F12 · Manifest of actual VARC TK

F13 · Three options E-26 and conditions of choice

VEKTOR E-26 · Data and Method

R11P → R12J · one body · Primary materials

The primary data of VECTORA allows you to separately accept a narrow digital service route and at the same time leave the landing structure on HOLD. The new TK does not inherit the old checkpoints automatically: it increases the duration of a stable support and requires one sample passport.

Digital acceptance AIR and missing stand

The registry contains 12 checks: 11 digital PASS, and BENCH - NOT_RUN, without receipt model_sha256. An important difference: the overall service route R12E has traceable CAD receipts, but the pressure, effort, retention and tightness are not tested on an individual sample.

PASS refers to the own scope of each digital receipt. The aggregation status of operational readiness of 11 lines is not calculated.

Where to verify — model_sha256 · tests[id=NATIVE/INSTALLED/PANELS/COVER/INSERTS/PARKED/FINE/COARSE/TOOLS/LID_LOCK/FIXTURE/BENCH].

Sources

F92 · acceptance.json

Why the local revision did not reset the entire service run

The final R12E retains 3825 recordings of forms, placements and service states. in each of the two guides only 0.182710 mm3, the added material is removed. This justifies the preservation of the previously found free space with such limited editing.

Monotonous removal of the material supports the free passage of rigid bodies, but the landing of the pairing and the carrying capacity of the guide still require a separate check.

Where to verify — unchanged_raw_native_shape_and_pose_records · verified_removed_material · scope.

Sources

F93 · rail-trim-equivalence.json

Determination of a sustainable stop and its area

The old criterion requires continuous 0.5 s at a speed of ≤0.1 m/s, the reaction of each wheel ≥ 100 N, the vertical velocity of the body ≤0.02 m/s and the ambient speeds ≤1°/s. Adverse cases simultaneously add 20 kg, a decrease in adhesion to 0.35, vertical speed 4.55 m/s and initial tilt / tangerage ± 1°. Braking is given after 1.1 s with an increase of 0.4 s.

Considered a flat platform and direct steering scope. excludes side / course control, promotion of the wheel when touched, thermomechanical destruction and qualification of real cards.

Where to verify — stable_criterion · brake · scenarios.nominal.inputs · scenarios.combined_roll_±1_pitch_±1.inputs · scope.

Sources

F94 · landing-r12i.json

VEKTOR E-26 · Evidence Review

R11P → R12J · one body · Primary materials

Where does the negative gap come from

The 1.06 mm tolerance budget covers machining, play, axial seating, assembly, temperature and wear, and interpolation between poses. In the nominal RR history at 0.024 s, the 3.5934 mm dynamic geometric clearance is reduced by 2.5517 mm of elastic closure and the tolerance budget, to −0.01833 mm. The frame accounts for 2.1388 mm of elastic closure.

An increased static gap of 2,4 mm does not remove the remark under load. the elastic amendment itself is limited to the applicability of the model at high voltages.

Where to verify — dimension_allocations_mm · dimension_budget_mm · corners.RR.worst_synchronized.

Sources

F95 · clearance-r12i.json

Chair: geometric transition R12I→R12J

R12J eliminates the initial gap 96 mm between the old pelvic support and the back. The registry lists 31 valid new body and nominal zero gaps in selected intersimilar interplays. However, the stage is directly recorded as Nominal geometric validation / HOLD for manufacture.

Nominal fit and new shape of the bowl do not confirm the material, belts, human retention, evacuation or strength of fasteners.

Where to verify — stage · legacy_pan_to_back_gap_mm · valid_single_solids · source_geometries_identical · mating_gaps_mm · excluded_checks.

Sources

F96 · geometry.json

The new TK changes the boundaries and leaves the signatures empty

The recommended profile 3 is a ground base with a removable set. c.4 requires recalculation of the stable support from 0.50 to 0.60 s and select one touch speed limit of 2.2–2.5 m/s. C.3 sets for the range a separate mileage at 110 km/h, load 85 kg, 20±5 °C and the residue of ≥5% SOC, and c.7 retains empty profile fields, protocols and signatures.

The old R12I calculation does not pass the new criterion automatically. there is no actual signed choice of profile or admission to the arrival in the document.

Where to check - c. 2 "Three profiles" · s. 3 "Calculation and Indicators and Rules of Comparison" p. 4 "Signal state" · s. 6–7 “Conditions of Transition”/“Record of the Approval”.

Sources

F13 · VEKTOR_E26_Spec_RU.pdf

Condition of the next decision

The nearest closure requires you to sign a profile, configuration, one touching criterion and an updated stable support window, and then show a general flight/plant joint with the agreed mass. C.7 TK separately requires the baseline rows, calibration, uncertainty assessment, re-processing and signature; the AIR digital acceptance does not replace such a record.

Tesla Roadster Rocket

Tesla Roadster Rocket · local model C6I and DEV44-DEV45 calculation series

Here is the local reconstruction of the C6I. It can be opened, trace the placement of units and repeat the calculation attempts. On the way, the car drives the electric drive. In the research air phase, there are reactive outputs of compressed air, and pallet channels with a skirt belong to the circuit of the pressor. Their purpose varies even with the neighborhood in the bottom.

Полупрозрачный C6I

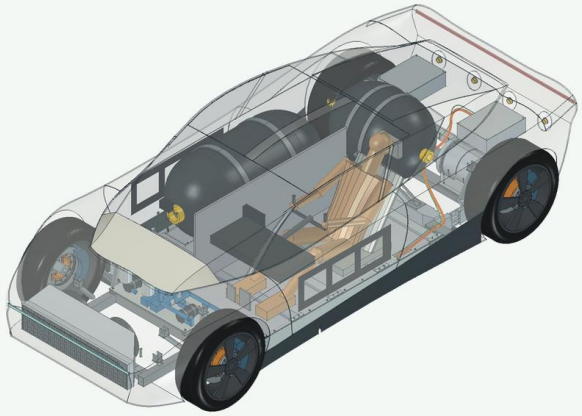

Кабина и силовая база

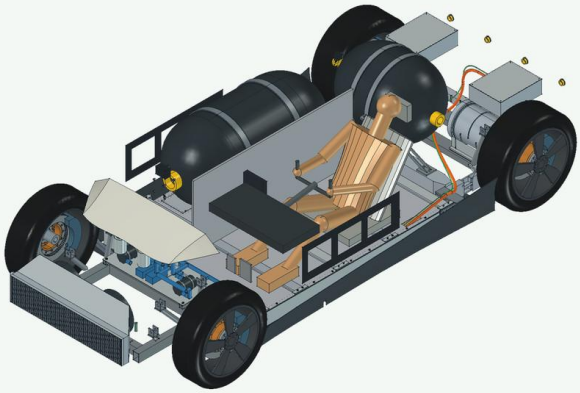

The Tesla Roadster Rocket. General appearance and open or dispersed assembly of the native atlas R5/C6I VIEW.

Sources

F165 · Full engineering atlas of the product

F164 · Passport of native atlas and personnel

Showcase and fresh release check

In a single DEV48 player, two calculation records are compared by separation, first touchdown or start. Under the cursor, gas flow, wheel reactions, grouse velocity and available energy channels are visible. AIR DEV44 has a rack limit, N2 DEV26 has a speed limit. The N2 full-energy fields are open.

Sources

Showcase of November 25

Open the point task mode

DEV48 · related runs

Method or record for updating

Native FeedBack from November 24

Tesla Roadster Rocket · Technical and Economic Parameters

C6I / Plan V1 · DEV51-AIR-STATION-01

The data relates to the local reconstruction of the C6I and plan V1. The values of V1 with the status of "Criterion TK" set the goal. The AIR replenishment cycle estimates includes the station's scenario power.

DEV52 adds the S1 AIR bench qualification programme. Three acceptance cycles are planned for each of T400 and T200. The published programme contains no bench results.

Parameter	Value	Evidence
Length × width × Height	4590 × 2031 × 1328 mm	Current C6I - From CAD · Planned V1 – TK Criterion
Dry Mass	Current C6I – 3194.8 kg · Planned V1 – ≤2 800 kg	Current C6I — Project evaluation · Planned V1 — TK Criterion
Traction battery · nominal energy	62,208 kWh	Engineering estimate
AIR · limited supply · time in the air	Current C6I — 1.3635 s · Planned V1 — —	Current C6I - Net Calculation · Planned V1 — Open
Readiness after refueling AIR	66.7 min	Engineering estimate
Electricity of the station over the AIR cycle	14,65 kWh	Engineering estimate
The cost of the AIR replenishment cycle	146,52 ₽/cycle	Engineering estimate
Cost of experimental sample	—	Open

Sources

Full passport in the catalog · 73 lines

Project showcase passport

Current showcase release

Tesla Roadster Rocket · CAD Views and Datums

Orthogonal photography and comparable physical scale

Спереди

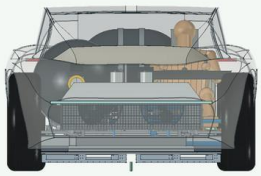

Слева

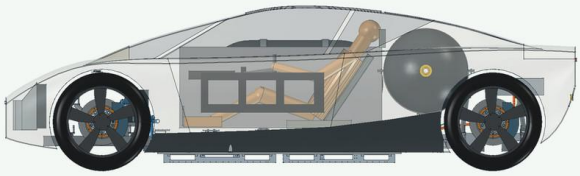

Front and left projections of CAD. On the sheet is designed one physical scale.

Compare the body profile with the view of the bottom. Submarine channels refer to the dilution at the coating. The position of the vessels and the general compound is read by open reconstruction, since the shell hides them for projections.

Сверху



Снизу

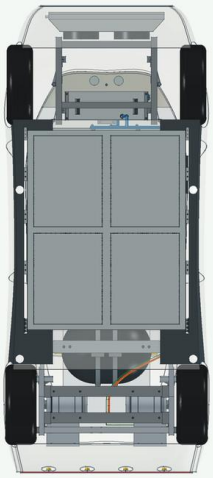

Upper and lower projections of the same stored revision. One physical scale is sustained.

Sources

F164 · Passport of native atlas and personnel

F165 · Full engineering atlas of the product

Tesla Roadster Rocket · Layout and Assemblies

R5/C6I VIEW

Модули батареи

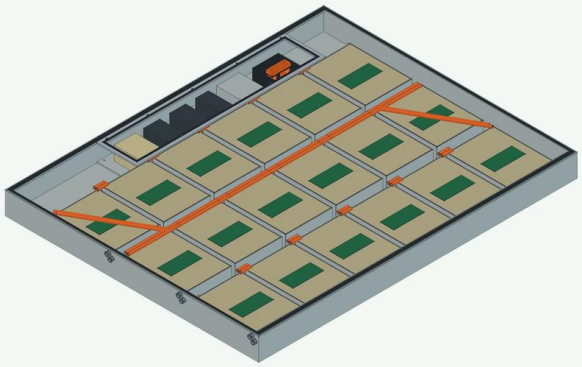

Агрегаты в сборке

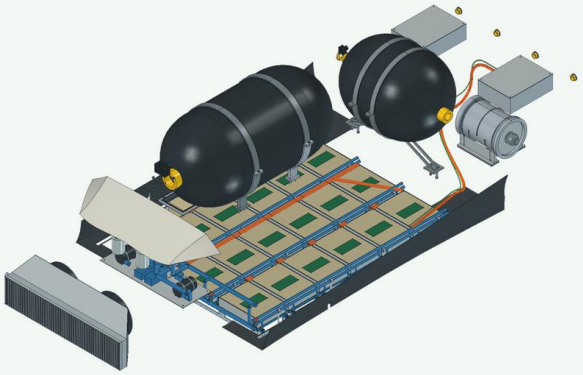

Battery and assemblies of digital reconstruction C6I with hidden external plating.

Knot	Purpose and interfaces
Publication model	The native copy of the VIEW coincided with 5 472 BRep records with the calculation file. The visibility and transparency of external panels are changed to show.
Battery and service	In the open battery, modules and connections are distinguishable. On the overall assembly, their proximity with an electric drive, the cabin area and the location of the units of the thermal circuit are visible.
Pneumatic branches	The geometry of the DEV44 shows that the reserve 22 branches converge to one common exit. The regular entrance to the tested model has an enclosed wall. This is a specific restriction when reading the route scheme.
Skirt W0/W1	A large CAD species is taken from a separate stand. It shows a couple of segments and a working jump. The forces during release, leakage, wear and synchronization require measurements.

Sources

F164 · Passport of native atlas and personnel

F82 · Native assembly C6I

F97 · Geometric Corridor is not a confirmed tract

Tesla Roadster Rocket · Airflow and Control

From the energy source to the response to the body

In the pallet branch with four channels, the central task is to maintain a useful pressure drop at the road and limit leaks along the edge. The reactive branch is to deliver the gas to the selected outputs while opening. The amount of local expenses cannot exceed the actual passage of the general compound. The functional scheme shows the order of actions, and the editing frames - the position of the branches and access to them.

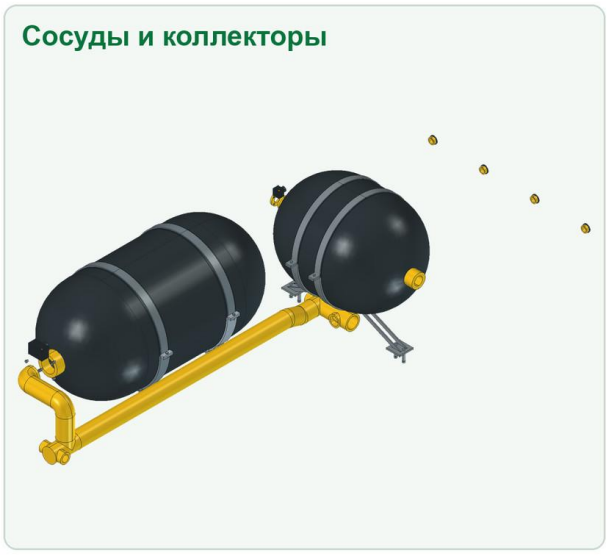



Lifting pneumatics and four pallet tracts. Contours are different from the purpose.

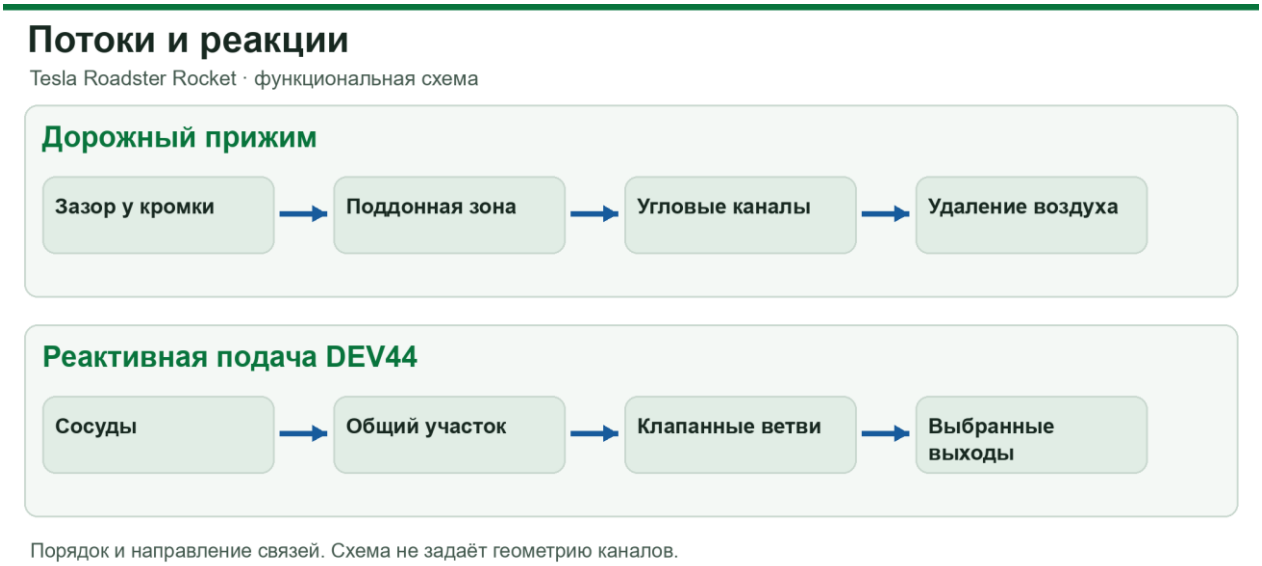

Explaining the scheme of functional connections. The sizes of the flow and geometry of the channels are determined by the primary materials.

Sources

F82 · Native assembly C6I

F97 · Geometric Corridor is not a confirmed tract

F98 · The area of calculating losses of the entire system

Tesla Roadster Rocket · How It Works

CAD Close-ups and Functional Diagram

Two branches of air



Roadster Rocket · Two branches of air. Atlas R5/C6I VIEW. The links are conditionally shown.

The skirt pressed to the road limits the leaks along the perimeter. In the gas branch, neighboring consumers share an affordable supply of a common connection. This changes the reaction of several exits with a simultaneous team.

CAD species refer to the local reconstruction of the C6I. The conditions of AIR and N2 are different.

Sources

Passport of native personnel and audit

The Four Corner Tracts

Vessels and collectors

Tesla Roadster Rocket · Showcase Screen

Reading System Behaviour and Telemetry

AIR and N2 at the first touchdown

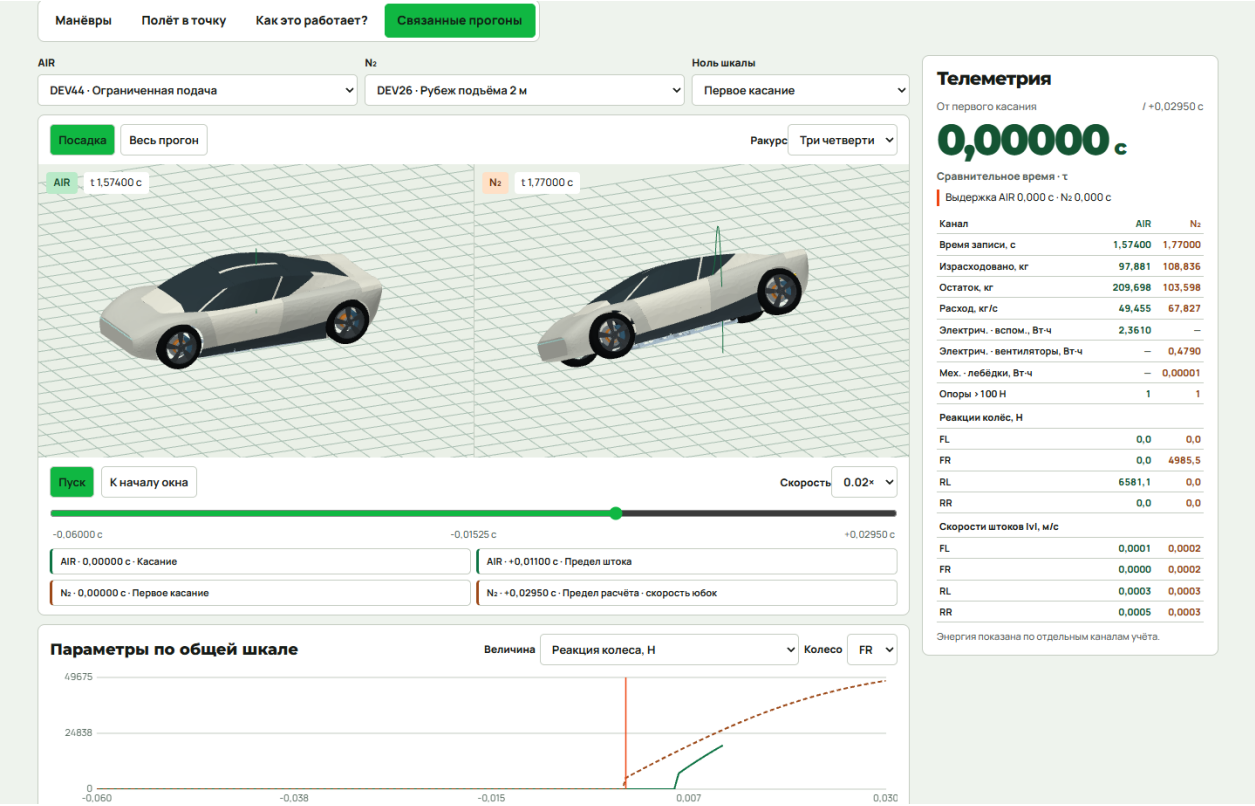

Roadster DEV48 · zero on the first touchdown. Picture of the local showcase on November 25, 2026.

The zero of the general scale corresponds to the first touchdown separately in each record. First, compare the number of supports and reactions of the wheels, then see the flow and residue. To assess the stop, you need an aging after a touch.

Indications relate to the selected step or digital script of the showcase.

Sources

Open the local showcase

Indicative screenshot

Tesla Roadster Rocket · Forces and Motion

Longitudinal, vertical and angular motion



Functional drawing of directions. The length of the arrows is conditional. The physical status of each phase is refined in the text.

What is changing	How to read movement and strength
Rise	The amount of vertical reactions determines vertical acceleration. A drop in pressure or saturation of a common supply reduces the available effort.
Turn	The strength difference in remote points changes orientation. The simultaneous team to climb and reversal depends on the distribution of the general feed.
Inhibition of the decline	A sufficient vertical component is required before the first touchdown. The follow-up criterion additionally checks the moves and speeds of RE4A.

In the DEV44, the feed command was ahead of the available already 0.2685 s. The nominal record gave the CM lifted 1,165 m from the start and peak 1.636 m above the world zero. The reversal did not begin, the endurance on four wheels was 0 s. In a separate small mode, 0.204 m of lifting and 0.50 s supports were obtained without reversal. The main program 5 m remains 0/4.

Sources

F100 · DEV45 options and verifiable selection condition

F113 · Tesla. Forge of the pair W0/W1, 2 pages

F114 · Tesla. Condition of the S1–S4 series

Tesla Roadster Rocket · Landing Gear and Load Paths

Load, Payment and Repeatability of AI-CAD

Четыре колёсных модуля



Стендовые секции юбки

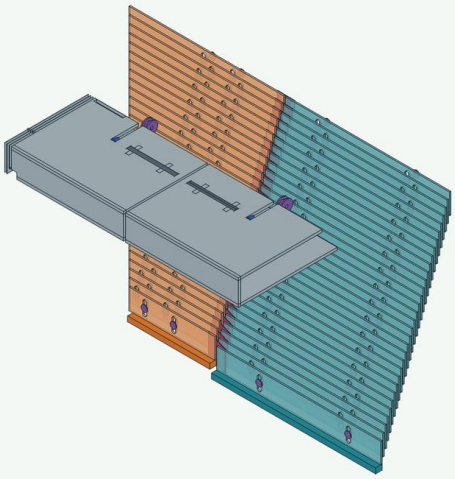

RE4A modules in assembly and bench pair W0/W1 skirts.

Inspection section	Loading Path and Conditions
RE4A	The contact force is transmitted through the tyre, hub, fist and reference links to the platform. The shock absorber limits the speed of movement and swinging.
Contact DEV44	The peak speed of the shaft 1.0502 m/s went beyond the checkpoint 1.00 m/s. The mass, eclipsis and the order of the touches should be read from one record.
Stands DEV45	Measuring cards for the general filing, front right node and skirts should be put into account jointly. Preserved forms help to link the stand and assembly by name and installation sites.

Design in AI-CAD TextToCAD

In one machine, three interfaces should be agreed. Air ducts work with external air, a high-pressure tract consumes a stock, and the suspension perceives the return to the supports. A total CAD is needed to check the placement and installation of these systems. The dynamics should be associated with a separately measured feed and loads.

Geometry DEV44 allows you to trace 22 branches to one exit and fix the state of the regular entrance. A special VIEW C6I file is open for publication, and the form check recorded a match of 5 472 BRep records with the calculation file. AI-CAD TextToCAD links the internal names of the parts, state of visibility and the treated sections with the exact source. The engineer gets a quick way to explain the found restriction and independently verify which container serves as the basis for calculation.

Tesla Roadster Rocket · Verification and Evidence

Large plans and terms of the next set-off

Кормовые агрегаты без обшивки

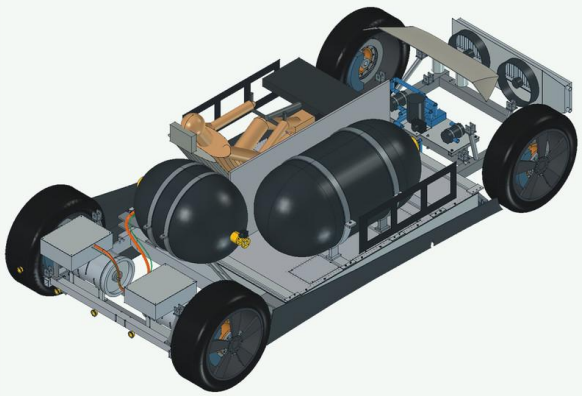

Секции юбки и перемычка

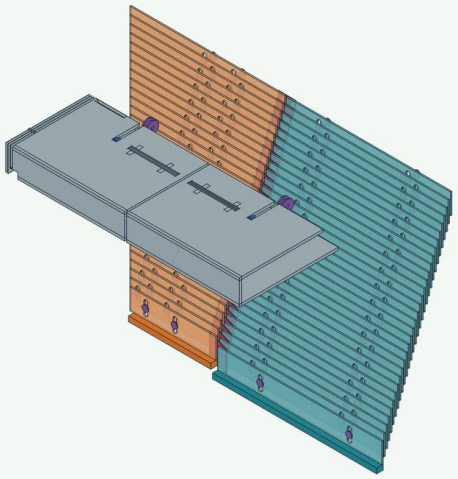

Close-up nodes from the native series. The angle and scale of each frame are selected for reading the details.

Verification	Result, area and required continuation
Continuity of Geometry	After DEV43 traced the service tool and 22 branches in 72 saved poses. In the DEV44, the total passage limited the related trajectory. The geometric presence of the route and the available supply are checked separately.
Countdown of heights	1,636 m above the world zero and 1.165 m from the start describe one peak in two ways. In comparison 5 m, you should first choose a single reper.
Chair, tires and skirt	DEV45 leads several separate measurement programs. It is necessary to collect a synchronous series of feeding, local course of the front right node and the state of the corner segments of the skirt.

When recalculated, measured maps of flow and rod are needed, the stored input composition and compliance with the support criterion. The sources of the real Tesla are taken into account separately from the local C6I.

Sources

F82 · Native assembly C6I

F97 · Geometric Corridor is not a confirmed tract

F98 · The area of calculating losses of the entire system

F99 · Six forms without measuring series

F100 · DEV45 options and verifiable selection condition

F113 · Tesla. Forge of the pair W0/W1, 2 pages

F114 · Tesla. Condition of the S1–S4 series

Tesla Roadster Rocket · Reading the Showcase

Viewing and sources

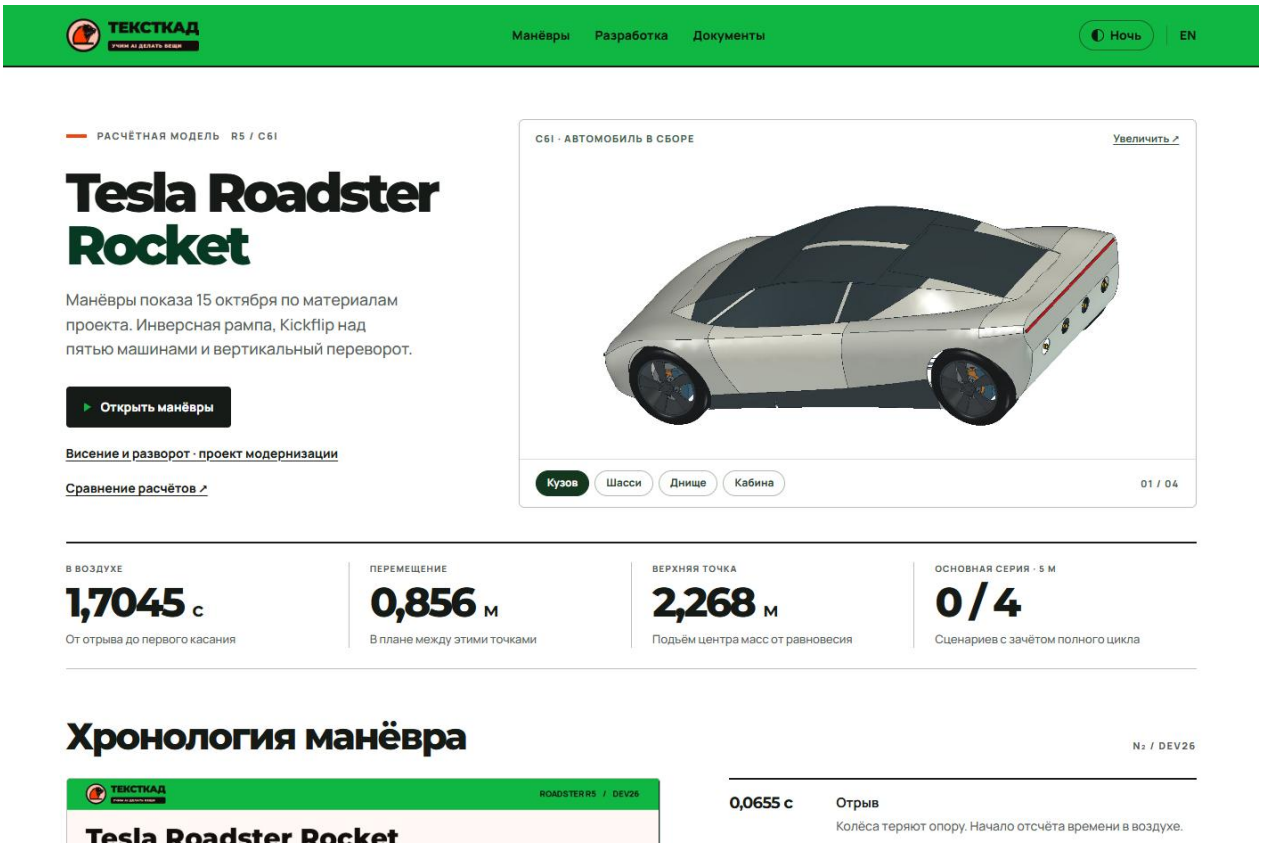

The starting screen of the project showcase "Tesla Roadster Rocket". An interface that opens by link from this section is shown.

Screen or document	What to watch and what to check with
Documents and models DEV44	Select the CAD section for the VIEW model, then the demonstration. The composition in the player and public footage of Rocket check the sign on the signed source.
Select the desired entry	In the player, open the nominal DEV44. DEV42 and other historic routes have their own entrances and conditions. Compare the pressure, flow, ups and supports on one scale.
Check the plans of the stands	Read the DEV45 and the list of measuring cards, including W0/W1. Each card indicates what uncertainty it removes in the related model.

Sources

F166 · Open the design window

F165 · Full engineering atlas of the product

F82 · Native assembly C6I

F97 · Geometric Corridor is not a confirmed tract

F98 · The area of calculating losses of the entire system

F99 · Six forms without measuring series

F100 · DEV45 options and verifiable selection condition

F113 · Tesla. Forge of the pair W0/W1, 2 pages

F114 · Tesla. Condition of the S1–S4 series

Results and conclusions

A short ups and low returns were received in digital reconstruction. The transition to the main offset depends on the measured joint supply, sustainable operation of the supports and check the gas reserve in one cycle.

Tesla Roadster Rocket · Development History

Decision chronology and separately issued checks

How the project has changed

At an early stage, the composition of the cabin, doors and skirts was checked. A long tool showed the inaccessibility of eight screws, despite the positive local gap. The conditional digital release of all 128 segments left real efforts and leaks open.

DEV25-DEV35 tracked the maneuvers to touch and revealed restrictions of the chassis and control. DEV36 investigated a separate external electrical installation. In DEV37-DEV42 returned to the C6I air circuit. Some positive runs used increased conditional reserves.

DEV42 revised the charge T400 s 212.4 to 129.1 kg on the source card. The DEV43 improved access to fittings and tested 22 branches in 72 stored postures. After taking into account the general filing of the previous landing in the DEV44 ceased to pass.

Sources

F15 · DEV43: service and layout result

F16 · DEV44: Saved telemetry and limitations

Sources

F97 · Tesla C6I. Geometry of the general feeding site

F16 · Tesla C6I. Power Balance, Trajectory and DEV44

Tesla Roadster Rocket · Results and Limitations

C6I · DEV43–DEV45

The main 5 m series remains on 0 of 4.

In the preserved nominal run of the DEV44 peak center of the mass center - 1.636 m above the world zero, the increase from the start is 1.165 m. The reversal didn't begin. The shutter speed on four supports is 0 s, the shading speed is 1.0502 m/s under the 1.00 m/s criterion. 98.42 kg air and 0.00238 kWh of auxiliary tyre were consumed.

The small return without reversal gave 0.204 m up and 0.5 s on four supports. This local result left the main set of 5 m by 0 of 4. On-board energy in the record covers auxiliary consumers, and the preparation of compressed air is taken into account separately.

DEV45 ed. 1.1 – audit of the saved records and optional TK. The committee compares a single C6I in the air, a different working environment and the flight/Track separation. In the original register of 280 requirements, in the expert program 24 questions and six forms of three measurement areas.

What Remains Open

The performance of the tract requires data on simultaneous feeding and the actual passage in the connection. The geometry of the route, free access of the tool and the availability of a gas reserve separately do not confirm the result of the entire cycle.

The nearest decision

When choosing the execution, use synchronous feed measurements, the characteristics of the front right node and the work of skirts. For separate Flight/Track, the committee has a separate standings of each car.

Materials checked on 24 November. All 4 of 4 DEV44 records and 31 of 31 records in the DEV45 package matched. Of the 43 audit sources, the 42 accessible files were independently checked. The expert attachment was accounted for using the register. Both design-brief PDFs contain 13 pages.

Sources

F17 · DEV44: Manifesto of Evidence

F18 · DEV45: audit of 43 sources and boundaries of conclusions

F19 · DEV45: current TZ RU/EN and bench programs

Tesla Roadster Rocket · Data and Method

C6I · DEV43–DEV45 · Initial Materials

It is important for Roadster to distinguish between the original C6I, the publication VIEW file and the DEV45 project. For the new translucent view, another FCStd container is used: its match in shape is checked separately, but the engineering statuses remain tied to the original passport and the calculation areas.

Two C6I: different SHAs and the same preserved forms

The independent read-only check on 24 November recorded the VIEW SHA as 80788f754523ce8c8efb8406db64845c1b9028d9bf74594e0545dc7a5a6ad4a7. The original C6I calculation model has SHA 645db17f4717f4747ead48376ecbf3b6deee1fb5496e6efd0f7809a25d47c85a. All 5472 matching BRep records were byte-identical. No BRep records were missing or added.

This is a comparison of archival forms, not a complete audit of placements / properties. Publishing SHA can not be recorded instead of SHA initial calculation or taking a picture for engineering acceptance.

Where to verify — ZIP: all 5472 *.brp/*.brep records · comparison with original INTEGRATION/cad/RRK_R5_INTEGRATED_C6I.FCStd.

Sources

F82 · RRK_R5_INTEGRATED_C6I_VIEW.FCStd

Why the absence of veto does not mean the test

AIR_NOMINAL and AIR_ADVERSE first_veto=null, but=false. The official result remains 0/4. In a separate preserved experience, DEV28 s high 2 m indicates one support and 0 s exposure: the speed limit of one rack does not mean a stable landing.

DEV45 – readback of saved data without new integration. decision.status=OPEN and owner_approval_evidence=null express the lack of the owner’s decision.

Where to verify — baseline.official_matrix · checks.dev28_n2_2m · bench_intake · decision.status/owner_approval_evidence.

Sources

F18 · BASELINE_DEV45.json

Geometric Corridor is not a confirmed tract

22 branches are reduced to one output, but pressure_wall_closed_as_source=true. scope directly defines STEP-cylinders as a geometric corridor: neither conditional passage nor the saved entrance of the car is qualified for the working environment.

This explains why the DEV43-free sculption and DEV44 numeric presentation do not close the physical continuity of the interface.

Where to verify — branches · common_vehicle_outlets · pressure_wall_closed_as_source · CAD_sha256 · scope.

Sources

F97 · geometry.json

Tesla Roadster Rocket · Evidence Review

C6I · DEV43–DEV45 · Initial Materials

The area of calculation of losses already of the entire system

The calculation uses CoolProp 8.0.0 and real gas, but the friction model covers only a short adapter. Turns, connections and the rest of the network are excluded. The SHA-tired charts and geometries associated allow you to reproduce this limited assessment.

Such screening is not a measured joint characteristic of the car and does not prove performance at other losses.

Where to verify — source · physics · coolprop_version · map_domain_kg · scope.

Sources

F98 · capacity.json

Six forms without measuring series

The register explicitly describes AIR, W0/W1 and S1-S4 CSV as files with headlines. the FR results field is empty, the S1-S4 card contains zero physical references. The collection of documents made the measurements reproducible, but has not yet added a single full-scary certificate.

The presence of a form, SHA and channel names can not be counted as a stand. The records, calibration and the signed area of applicability are required.

Where to verify — files[source_id=air_capture/w0w1_capture/s1s4_capture/fr_intake/s1s4_intake] · scope.

Sources

F99 · INDEX_RU_EN.json

DEV45 options and verifiable selection condition

For B1, B2 and B3, various passports and grounds for continuation are provided. ARCH-01 requires each branch to assign a decision with a decisive limitation and postpones the choice in the absence of at least one critical card. MAC-01 separately requires sources and ranges for 93 R08 estimation positions: the claimed relief at 863 kg is not considered a ready result.

Weeks 2-3 - a conditional window of choice, not the promised readiness. The list of 24 questions is closed by separate records with an option, owner, source, period and error.

Where to check - c. 2 "How to choose architecture", ARCH-01 · p. 4 "Mass and heat assistance", MAS-01 · p. 12–13 “Progress Plan”/“How to close questions”.

Sources

F100 · Roadster_DEV45_RU.pdf

Condition of the next decision

The decision DEV45 is considered to be held after recording according to the ARCH-01 s selected composition, mass, adopted by the measuring maps and terms of revision. The three bench destinations have not yet given the verified series; therefore, the transfer of the date or release of a new visual C6I does not change OPEN and 0/4. When transfer, save the original SHA 645db... and separate publication SHA 80788....

LLTV

Lunar simulator LLTV · reconstruction of NASA 952 R4D.1

LLTV gives the pilot the opportunity to work out the lunar landing on Earth. The main engine compensates for most of the earth's weight, a pair of smaller engines changes the height, and the RCS units are targeting. Therefore, three different routes of operation of forces and their connection with the center of the masses, supports and the pilot's post are important in the drawing.

Общая сборка NASA 952



Ферма с агрегатами

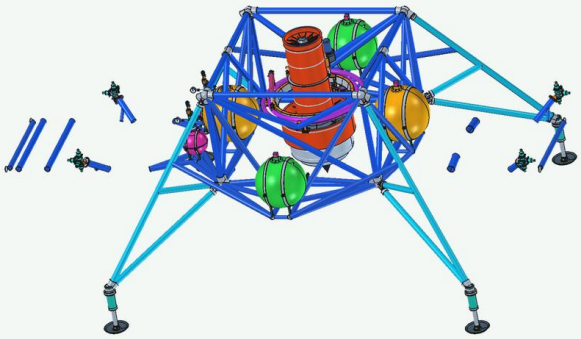

LLTV. General view and open or dispersed assembly of the native R4D.1 · NASA 952.

Sources

F168 · Full engineering atlas products

F167 · Nadal atlas and personnel passport

Showcase and fresh release check

Showcase R02 links CAD R4D.1, passport R01 and route R04. The library indexes 801 project files by category and status. The verified three-waypoint route takes 82.89 s from liftoff to first touchdown. LLTV library

Sources

Showcase of November 25

Open the point task mode

LLTV R04 · route and landing

Method or record for updating

Evidence PDF route R04

Numerical data of the route

Native FeedBack from November 24

LLTV · Technical and Economic Parameters

NASA 952 · R4D.1 / route mode R04

The basic cycle and route on three points are different scenarios of the R4D.1 series. Hworks are taken from the scenario. The real rules of refueling and maintenance remain open.

Parameter	Value	Evidence
Length × width × Height	6,548 × 4,086 × 2,817 m	CAD / mass ledger
Empty vehicle	1 173,771 kg	CAD / mass ledger
Full start weight with pilot	1 768,071 kg	CAD / mass ledger
Vertical velocity of touch	0,161 m/s	Simulation
From separation to touch · base cycle	31,74 s	Recalculated
Flight on three points · time in the air	82,89 s	Recalculated
Productivity and time of refueling He	No confirmed data	Unverified
Operational labor costs / attempt	20 / 12 people	Scenario estimate

Sources

Full passport in the catalog · 56 lines

Project showcase passport

Current showcase release

LLTV · CAD Views and Datums

Orthogonal photography and comparable physical scale

Спереди

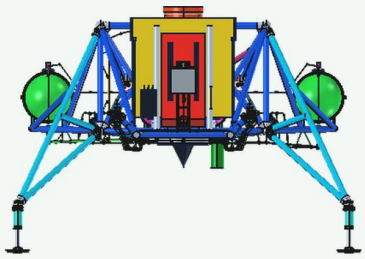

Слева

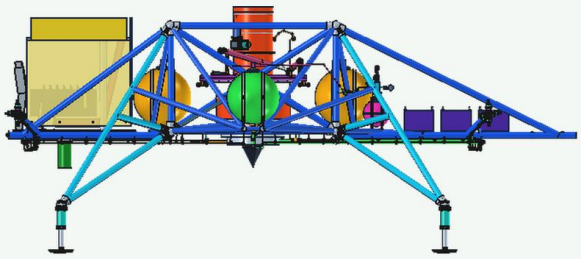

Front and left projections of CAD. On the sheet is designed one physical scale.

Front projection shows the balance of the transverse layout, the side - the mutual displacement of the cabin, the power axle and supports. The lower look helps to find the spread of RCS posts relative to the frame center.

Сверху

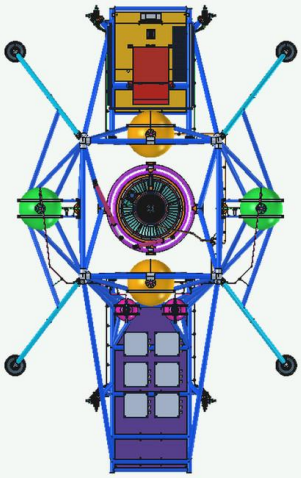

Снизу

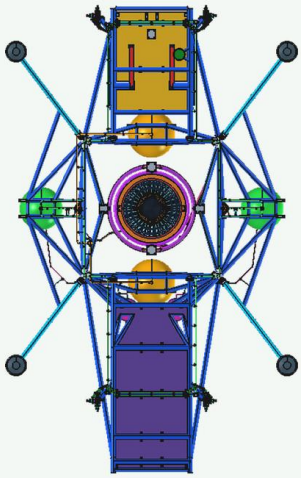

Upper and lower projections of the same stored revision. One physical scale is sustained.

Sources

F167 · Nadal atlas and personnel passport

F168 · Full engineering atlas products

LLTV · Layout and Assemblies

R4D.1 · NASA 952

Продольное сечение

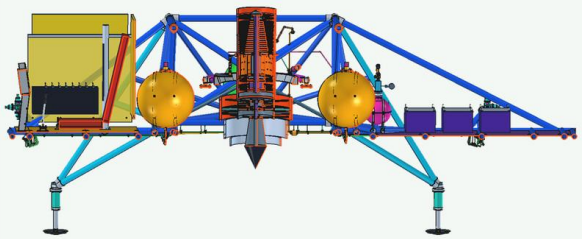

Поперечное сечение



Longitudinal and cross-sections of the LLTV R4D.1 frame.

Knot	Purpose and interfaces
Spatial Farm	The central group CF700, two lifting branches and cabin are based on a common system of nodes. Sections show where the passages and fastenings cross the frame planes.
Cardan CF700	The cardan allows you to change the recurrent angle of the body and the main thrust vector. In imitation mode, the vertical reaction compensates for about five sixth terrestrial weight.
Two lifting engines	The pair reactions change the movement relative to the balance of the effective weight. The engine location and its mounts are shown on a separate frame.
Inkjet posts	RCS is separated from the center. In CAD, you can trace their placement and mounting nodes. The work commands and characteristics remain tied to their calculations and sources of the board.

Sources

F167 · Nadal atlas and personnel passport

F30 · Atlas RU

F31 · Description of issue

LLTV · Airflow and Control

From the energy source to the response to the body

The axial incision of the CF700 is read from the entrance and compressor zone through the hot part to the release. The rotary connection returns part of the flow energy to the compressor drive. The cardan changes the direction of the main reaction relative to the hull. The battering pair and orientation contours remain separate functional systems. It is necessary to add all the forces in the general coordinate system, taking into account the current angle of each group.

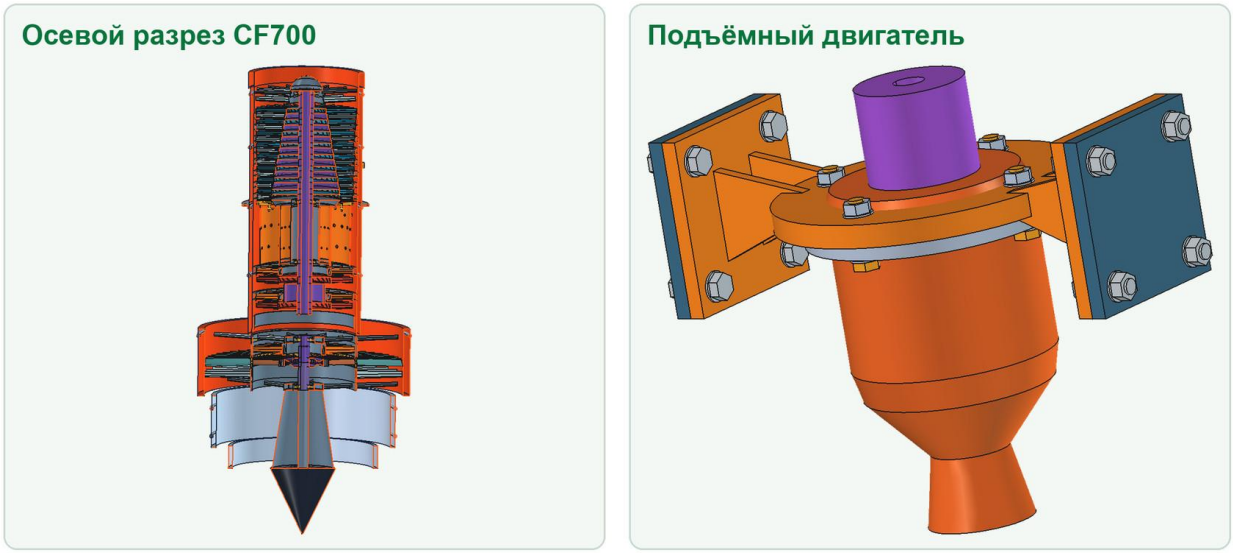

Axial incision CF700 and a separate lifting engine.



Explaining the scheme of functional connections. The sizes of the flow and geometry of the channels are determined by the primary materials.

Sources

F30 · Atlas RU

F31 · Description of issue

F132 · LLTV. Transposition and yingrest scripts

LLTV · How It Works

CAD Close-ups and Functional Diagram

CF700, Cardan and Orientation

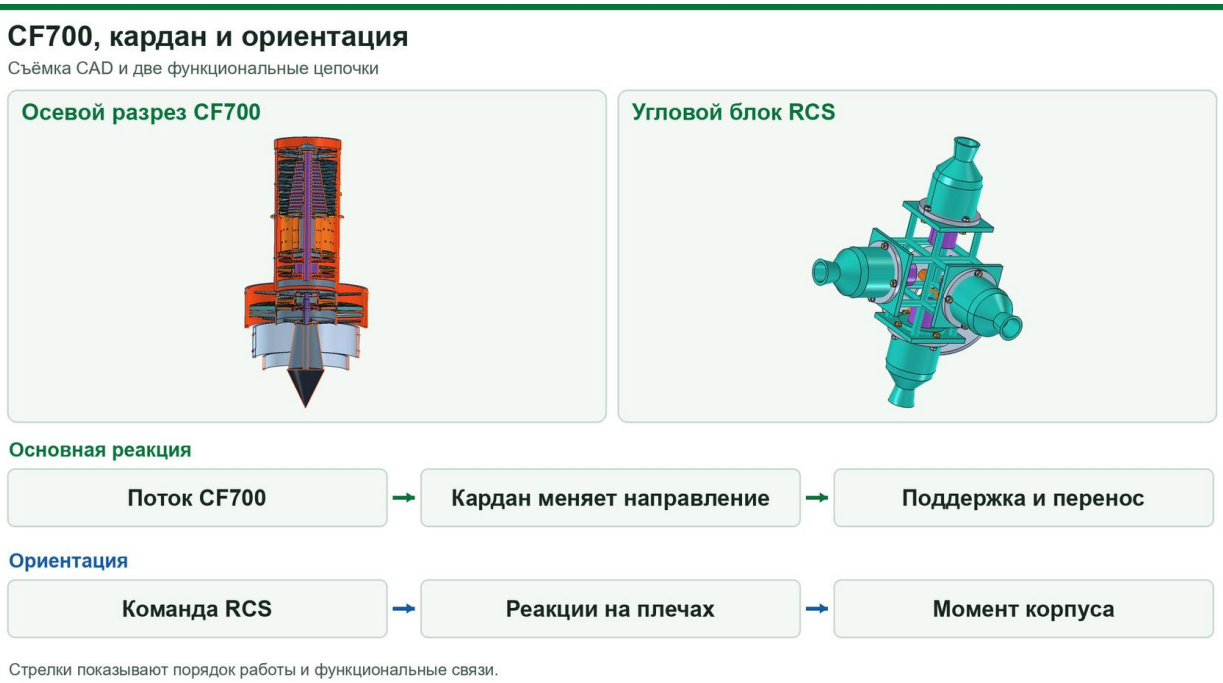

LLTV · CF700, cardan and orientation. Atlas R4D.1 · NASA 952. The connections are conditionally shown.

The connection of the rotors returns part of the energy of the compressor flow. Cardan rejects the main reaction relative to the hull. A pair of Bell lifting engines and RCS units form separate functional groups.

NASA 952 is shown on the R4D.1 atlas. The episode refers to the digital explanation of the device.

Sources

Passport of native personnel and audit

CF700 on axle

RCS Block

LLTV · Showcase Screen

Reading System Behaviour and Telemetry

CF700 and Cardan in 3D lesson

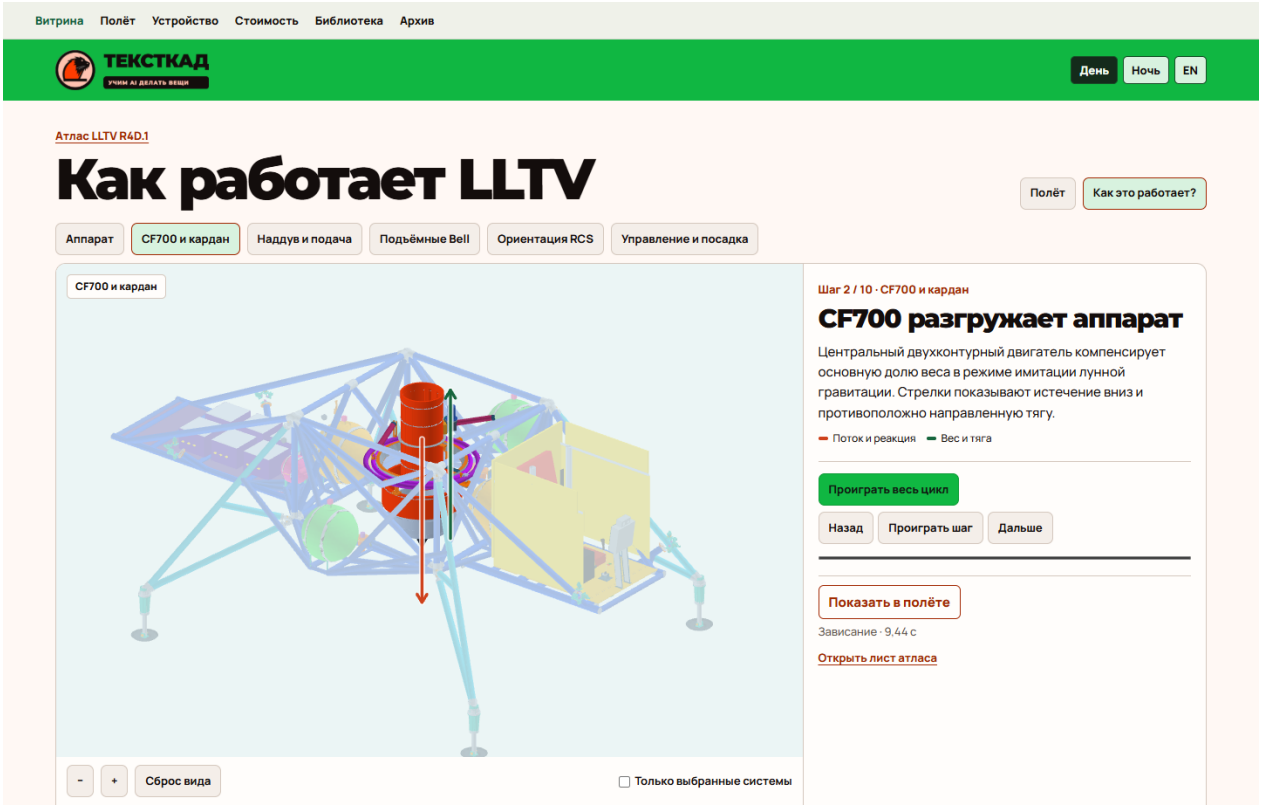

LLTV R4D.1 · CF700 and cardan. Picture of the local showcase on November 25, 2026.

See what the player emits around the engine axis and in the suspension unit. Compare the direction of the engine with the position of the farm. When dissecting orientation, go to a separate RCS group.

Indications relate to the selected step or digital script of the showcase.

Sources

Open the local showcase

Indicative screenshot

LLTV · Forces and Motion

Longitudinal, vertical and angular motion

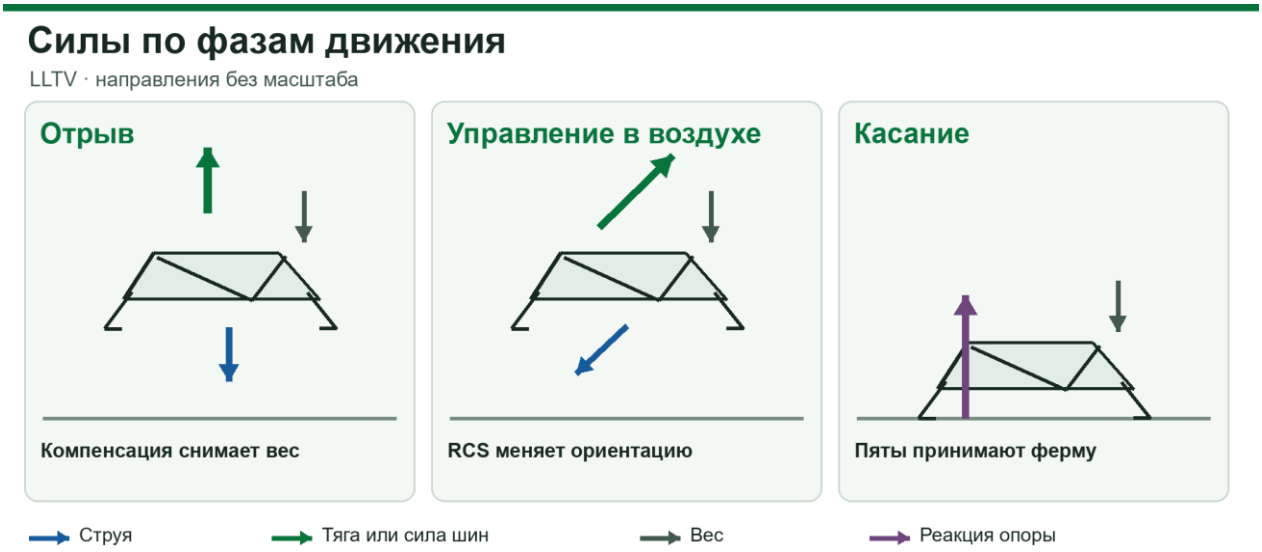

Functional drawing of directions. The length of the arrows is conditional. The physical status of each phase is refined in the text.

What is changing	How to read movement and strength
Vertical	Compensation CF700 reduces the effective load. The remainder determines how much the vertical speed of the pair will change.
Transfer	In lateral motion, the horizontal component of the actual resulting factor is important. Cardan can keep the main vector close to the vertical when the body is tilting.
Course	RCS pairs create moments. With a small resulting horizontal effort, a reversal with a small displacement of the center of the masses is possible.

In the nominal scene R4D.1, the gap is indicated by 2,812 s, the touch is 34.553 s. In the air 31,741 s, transferring 4.00 m. The maximum clearance under the supports of 1.759 m and the height of the center of the mass of 3,503 m belong to different rappers. In a separate series of 3 m/s headwinds 2 m/s reduced the model range from 87 to 47 m in the same landing scenario.

Sources

F30 · Atlas RU

F31 · Description of issue

F132 · LLTV. Transposition and yingrest scripts

LLTV · Landing Gear and Load Paths

Load, Payment and Repeatability of AI-CAD

Блок RCS

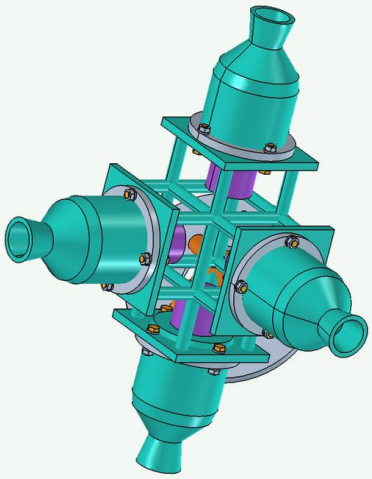

Передняя правая опора

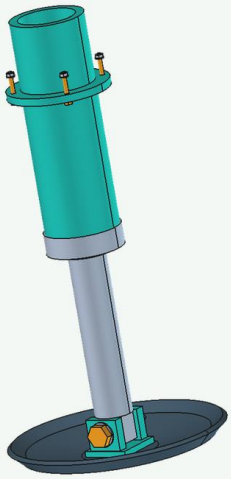

The RCS Inkjet Block and NASA 952 front right support.

Inspection section	Loading Path and Conditions
Input load	The contact heel transfers force to the rack and its slopes, then distributes the reaction between the farm nodes.
The first contact	When tilted, the first touches the nearest support to the site. The impact and further shutter speed depend on the accepted contact model.
Check on board	The next simulation is compared with one identified NASA 952 mission using the same initial mass, centre of mass and event definitions. The landing foot close-up provides the geometry for that comparison.

Design in AI-CAD TextToCAD

The main principle is to spread the functions of weight compensation, upsurge and orientation. Cardan, engine fastenings, the position of the tanks and the geometry of the entire apparatus should be checked relative to one centre of mass. The historical parameters of the board of NASA, the approvals of the reconstruction and the calculation scenario are stored with obvious boundaries.

In R4D.1, one native model provides the frame views, CF700 cutaway and RCS close-up. Poses and force channels can be named and tied to the geometry for consistent presentation in the atlas and player. TextToCAD makes it possible to verify which gimbal, engine and fasteners belong to the illustrated revision. Motion calculations are checked separately against event times and inputs.

LLTV · Verification and Evidence

Large plans and terms of the next set-off

Роторная группа CF700

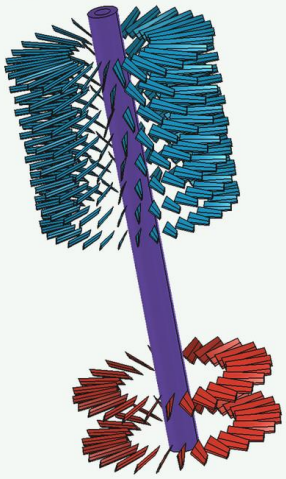

Пост пилота

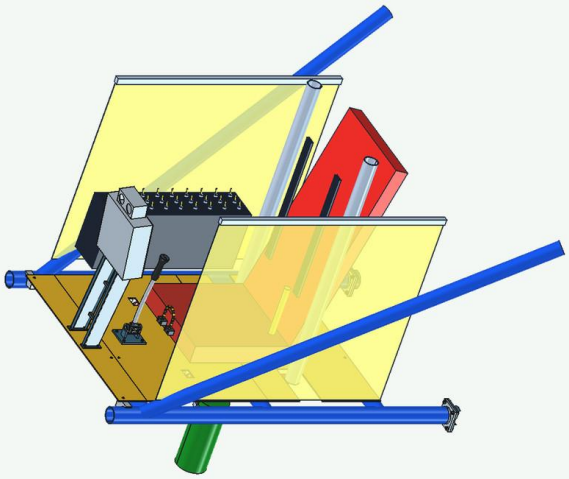

Close-up nodes from the native series. The angle and scale of each frame are selected for reading the details.

Verification	Result, area and required continuation
Several reperhee	In the nominal series, the maximum height of CM 3.503 m, the minimum basis has a peak light of 1.759 m. The height comparison should always be called the measured point.
Wind and range	In the same case of the landing scenario for air speed 3 m/s, the wind model changes the result from 87 to 47 m. This is the effect of the selected input conditions, and not the limit of the range of the historical board.
Player Scripts	The player shows 12 combinations. Before comparison, it is necessary to check the mode of the main engine, the flow rate and the control of the gap and the last stage.

Comparison with NASA reports requires an identifiable mission and matched time points with the same definitions of contact, mass and thrust.

Sources

F30 · Atlas RU

F31 · Description of issue

F132 · LLTV. Transposition and yingrest scripts

LLTV · Reading the Showcase

Viewing and sources

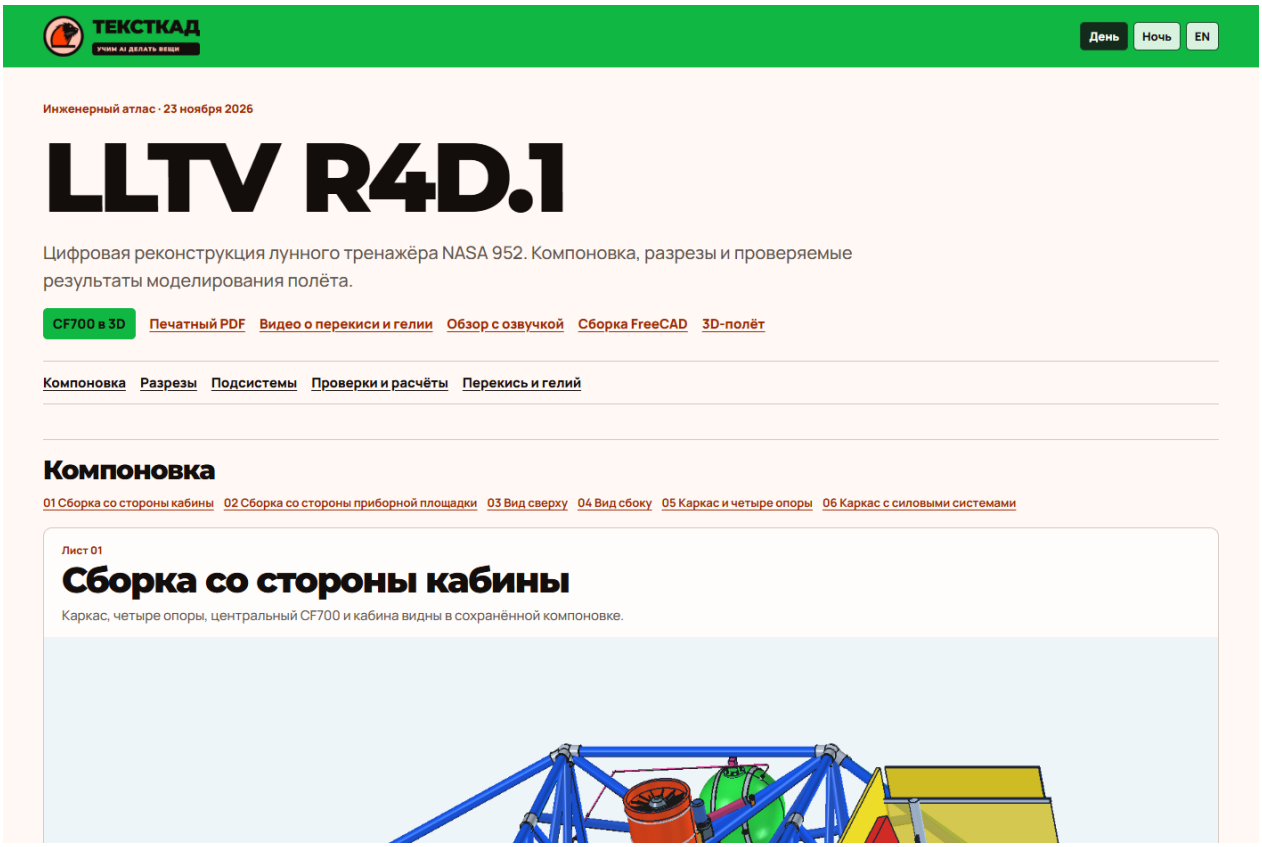

The starting screen of the project showcase "LLTV". An interface that opens by link from this section is shown.

Screen or document	What to watch and what to check with
Atlas R4D.1	Open the longitudinal and cross-sections. Separately compare the CF700, rotors, lifting engine, RCS post and support.
3D flight and manners	Choose a nominal exercise and mark the gap and the first touchdown. Share the height of the centre of mass and the minimum lumen under the supports.
Archival bases	Open a report of maneuvers and a comparison of the influence of the wind. For historical approval, check the board and mission parameters in NASA materials and project sources.

Sources

F30 · Open the design display

F168 · Full engineering atlas products

F30 · Atlas RU

F31 · Description of issue

F132 · LLTV. Transposition and yingrest scripts

Results and conclusions

R4D.1 has a weight compensation relationship with lifting, transfer and contact. To check the limit mode, measured engine inputs, orientation and side supports are required.

LLTV · Development History

Decision chronology and separately issued checks

How the project has changed

At first, the authors connected the position of the centre of mass and 19 traction channels with virtual dynamics. Then the beginning and end of each event were fixed, terrestrial phases, consumption and reserve were taken into account separately.

The next cycle combined the roadster frame markup, Excel-meg, the cost of the attempt and the methodological guide. Later, pre-project assessments of the two plants and a catalog of equipment in the Russian Federation appeared. Assumptions about the park and loading determine the applicability of these estimates.

The autonomous showcase includes download scenarios, speed and wind. The final atlas of one model contains 27 sheets in each language. Sheet 09X allows you to rotate the reconstructed CF700 rotors in the section.

Sources

F29 · Manifesto of Atlas

F30 · Atlas RU

Sources

F30 · LLTV. Atlas R4D.1, Incisions and Native Assembly

F132 · LLTV. Maneuvers and phase consumption

LLTV · Results and Limitations

R4D.1 · TZ-LLTV-02

31,741 s in the air in the nominal model.

In the nominal 43-second record, the gap occurs on 2,812 s, the first touchdown - at 34,553 s. Total in the air 31,741 s, displacement 4.00 m, maximum clearance under the supports of 1.759 m. The maximum height of the center of the mass above the site is 3.503 m.

In a separate series, at full check-in and air speed, 3 m/s the headwind 2 m/s reduced the model range from 87 to 47 m. The same standard landing scenario was used to assess the effect. The player shows 12 combinations of conditions.

What Remains Open

NASA sources and the calculation telemetry of the reconstruction describe different objects of observation. To verify the limits, calibrated data on mass and inertia, system response, liquid dynamics and control restrictions are needed.

The nearest decision

Tie the input set to a specific aircraft and revision R4D.1. Compare the measured and calculated histories for the same mission with matching liftoff and touchdown events.

Verification of materials on November 24. The recalculated SHA-256 Russian page of the atlas coincided with the manifesto. The R4D.1 passport is corrected, the comparison technique, the composition of the atlas and the manifesto of the nominal mission.

Sources

F31 · Description of issue

F32 · TK and track

F33 · Manifesto of the nominal mission

F34 · LLTV and Roadster Comparison Methods

F35 · calculator of the cost of the attempt LLTV and Roadster

LLTV · Data and Method

R4D.1 · TZ-LLTV-02 · Primary materials

LLTV R4D.1 combines the reconstruction of NASA 952 s elements of the early LLRV-1 cabin; the dates and parameters of different configurations can not be mixed. Below are the saved results and the exact locations of their verification.

Events of the virtual mission

In the nominal run, the gap of 2.811529 s, the first touchdown of 34.552613 s, the completion of the stop at 40.94 s. In the air 31,741084 s with full recording 43 s.

This is a calculated virtual mission, not a measured departure.

Where to verify — nominal.events, nominal.airborne_s and nominal.record_s.

Sources

F33 · manifest.json

Configuration and criterion T08

The track from 19.11.2026 fixes R4D.1 and indicates that T08 requires a comparison of 6DoF with hardware check and actual weighing. The calculation of the R4C cites 1174,12 kg of dry mass and 1768.42 kg of the full scenario.

The mass is calculated and include assumptions. R4B playback does not establish the accuracy of R4D.1.

Where to check - "Sourse configuration and boundaries of calculations" · "Indean documents".

Sources

F32 · TK_i_track_flying_simulation.md

LLTV · Evidence Review

R4D.1 · TZ-LLTV-02 · Primary materials

Atlas and Interactive Cut

In issue 23.11.2026, one build is shown. sheet 09X shows a geometric incision and independent scrolling of two rotors.

Geometric angles and image do not confirm the characteristics of the operating engine.

Where to check - "Interactive CF700".

Sources

F31 · README_RU.md

Sensitivity of the estimate

For the nominal row, the scenario rates of 5, 10 and 20 USD/kg give 46 881.60. 88 327,28 and 171 218,64 ₽, respectively.

This is a partial scenario cost of materials, no quote and not a complete price of successful departure.

Where to verify — CSV: case=nominal, zone=RU, illustrative_htp_usd_kg=5,10,20, subtotal.

Sources

F104 · LLTV_price_floor.csv

Condition of the next decision

The closure requires weighing and inertia of a particular assembly, measured system response and comparing 6DoF with independent hardware check.

C400P2

C.400 P.2 · Atar and stream control · R6E5 and separate R6E1 engine

C.400 P.2 is built around the Atar vertical turbojet engine. The main stream creates an ascent. For movement and reversal, the project uses the air selected from the compressor. The ring tank and wheel racks are located around the power axis, so fuel consumption and geometry of supports are important together with the jetpower.

Сборка с базой 5 250 мм



Бак и центральный агрегат



C.400 P.2. General view and open or sprawling assembly from the native atlas R6E5 · 5 250 mm.

Sources

F170 · Full engineering atlas products

F169 · Passport of native atlas and personnel

Showcase and fresh release check

Consolidated showcase links simulators, valves, Atar incision, video and reports. In a long calculated route, the reserve forecast leads to landing at point No. 3. Points 4-6 are passed. The comparative RR-H1 refers to the Roadster replica.

Sources

Showcase of November 25

Open the point task mode

Showcase C.400 P.2 and Roadster

Method or record for updating

Native FeedBack from November 24

C.400 P.2 · Technical and Economic Parameters

Archive C.400 P.2 / reconstruction R6E5

The numbers in the pair R6E5 are for diagonals of supports 4 100 / 5 250 mm. The unit indicator refers to the geometrical estimate. In a full passport, the guide column Roadster R5/C6I is shown under its name.

Parameter	Value	Evidence
Diagonal between supports	C.400 P.2 · archive — 5,250 mm · C.400 P.2 · R6E5 — 4,100 / 5,250 mm	C.400 P.2 · archive — Archive · C.400 P.2 · R6E5 – CAD
Mass without a working body	C.400 P.2 · archive – 2 150 kg · C.400 P.2 · R6E5 – 2 000 kg	C.400 P.2 · archive — Archive · C.400 P.2 · R6E5 — Input of the model
Initial mass with full gas	C.400 P.2 · archive – 2 600 in the text / 2 640 in the table kg · C.400 P.2 · R6E5 – 2 600 kg	C.400 P.2 · archive — Archive · C.400 P.2 · R6E5 — Input of the model
Time from separation to first touchdown	C.400 P.2 · archive — 255 s · first free flight · C.400 P.2 · R6E5 — 415.03 / 415.03 s	C.400 P.2 · Archive — Archive · C.400 P.2 · R6E5 – Calculation
Horizontal Displacement to Complete Stop	4 511,4 / 4 511,4 m	Calculated
Vertical speed CM when touched	0,089 / 0,090 m/s	Calculated
Basic unit estimate, Russia	2,829 / 2,840 million ₽	Cost estimate
Operating cost of the cycle	Tariff, maintenance, equipment and resource of aggregates are open	Open

Sources

Full passport in the catalog · 53 lines

Project showcase passport

Current showcase release

C.400 P.2 · CAD Views and Datums

Orthogonal photography and comparable physical scale

Спереди



Слева

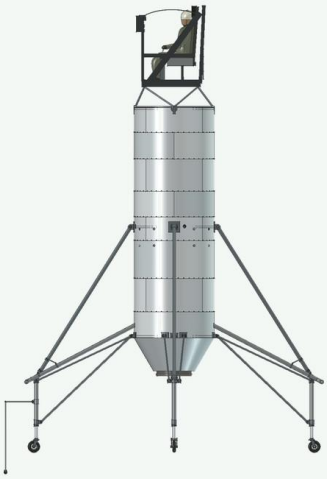

Front and left projections of CAD. On the sheet is designed one physical scale.

On the profile projection, the central axis of the engine is convenient to link to the vertical circuit "air intake - release". The lower appearance shows how the four wheeled racks cover the central zone and in which places the executive branches can pass.

Сверху

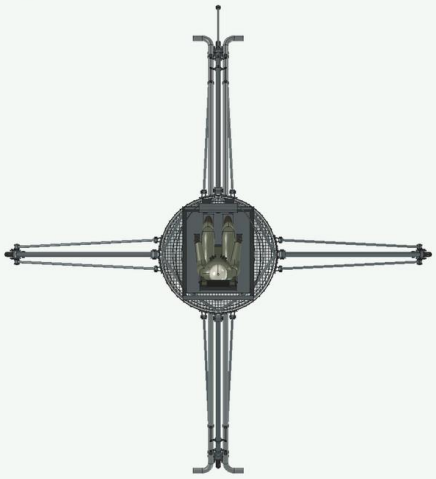

Снизу



Upper and lower projections of the same stored revision. One physical scale is sustained.

Sources

F169 · Passport of native atlas and personnel

F170 · Full engineering atlas products

C.400 P.2 · Layout and Assemblies

R6E5 · 5 250 mm

Осевой разрез Atar



Горячая часть R6E1

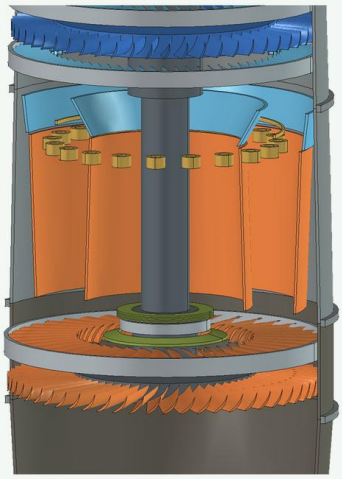

Longitudinal section of the Atar and a close plan of the hot zone. The engine relates to a separate revision of R6E1.

Knot	Purpose and interfaces
R6E5 and two diagonals	The negative review in this section refers to the shown build 5 250 mm. In the project comparison also appears 4 100 mm. When comparing the supports, you need to check the mounting configuration.
Atar R6E1	A separate detailed incision helps to read the compressor, energy supply, turbine communication and release. Here he explains the engine, and the mounting position is read by R6E5.
Ring tank	Fuel layout surrounds the central unit. For dynamics, you need to monitor the mass and center as you move as it is used, as well as to coordinate the reference interfaces.
Post of Pilot	On the nodular form you can see the chair and the instrumental part above the air intake. Access, protection and work angles are evaluated separately from appearance.

Sources

F169 · Passport of native atlas and personnel

F38 · Atlas RU

F39 · Description of the Atlas

C.400 P.2 · Airflow and Control

From the energy source to the response to the body

The compressor provides a stream for the hot tract and gives part of the air to the control circuit. On the CAD list, this branch is traced through the C3 collector to the executive sections. The sectoral blow changes the direction of the main jet. Other tubes create a moment around the longitudinal axis of the device. When assessing the balance, you need to take into account the selection at the same time, how much the main reaction remains to rise.



Wiring the control air and the post of pilot. Assemblage R6E5.

Потоки и реакции

C.400 P.2 · функциональная схема

Горячий тракт Atar

Воздухозаборник → Компрессор → Горячая часть → Вертикальный выпуск

Управляющий воздух

Отбор компрессора → Коллектор C3 → Секторный вдув → Вектор и момент

Порядок и направление связей. Схема не задаёт геометрию каналов.

Explaining the scheme of functional connections. The sizes of the flow and geometry of the channels are determined by the primary materials.

Sources

F38 · Atlas RU

F39 · Description of the Atlas

F40 · Audit R6E5

C.400 P.2 · How It Works

CAD Close-ups and Functional Diagram

Air Selection and Guit

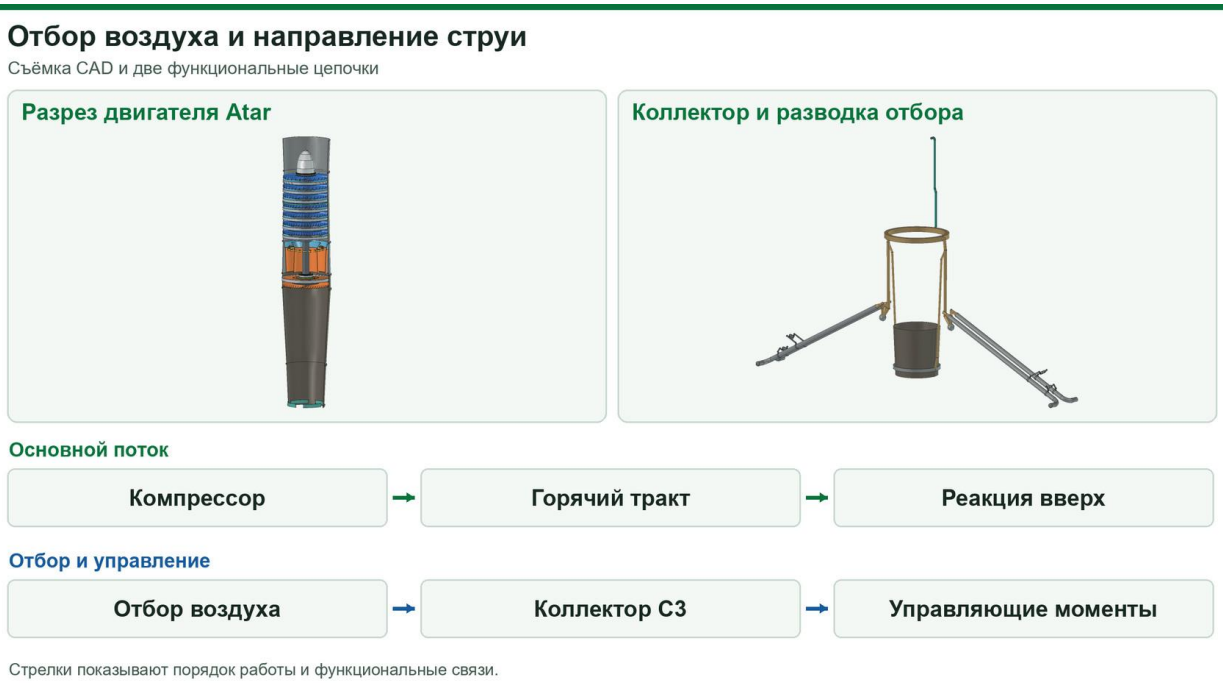

C.400 P.2 · Air Selection and jet direction. Atlas R6E5 · 5 250 mm. The links are conditionally shown.

Part of the air from the compressor zone enters the control branches. The sector blow changes the direction of the main jet, and individual tubes create a moment around the longitudinal axis. Selection affects the available lifting reaction.

The Atar and the general CAD build have their own revisions. Measured traction cannot be in appearance.

Sources

Passport of native personnel and audit

Longitudinal Incision Atar

Selection breeding

C.400 P.2 · Showcase Screen

Reading System Behaviour and Telemetry

Engine dismantling in the window C.400 P.2

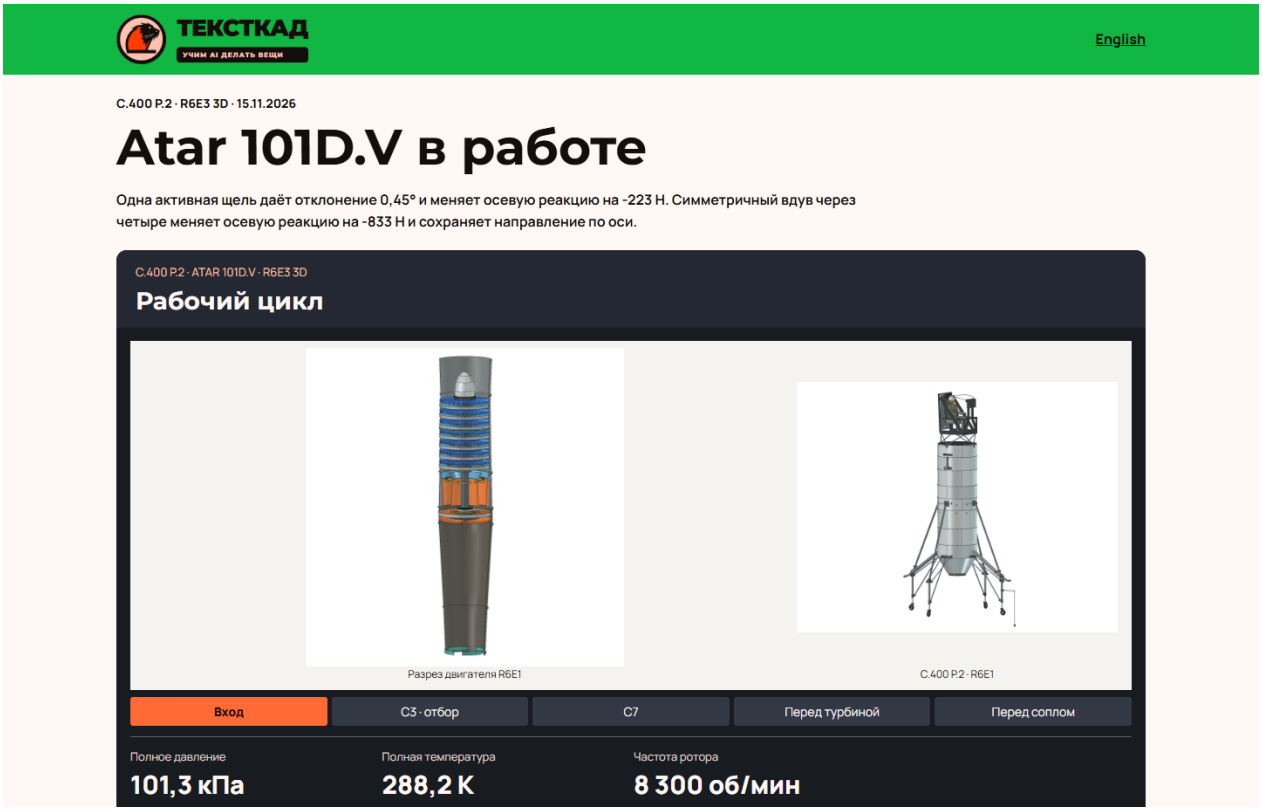

C.400 P.2 · Atar R6E3 3D. Picture of the local showcase on November 25, 2026.

Check the stages signatures and the position of the working node on the screen. From left to right on the list of sections, find where the compressor, hot tract and selection branch are shown. Compare the blocks with the CAD list.

Indications relate to the selected step or digital script of the showcase.

Sources

Open the local showcase

Indicative screenshot

C.400 P.2 · Forces and Motion

Longitudinal, vertical and angular motion

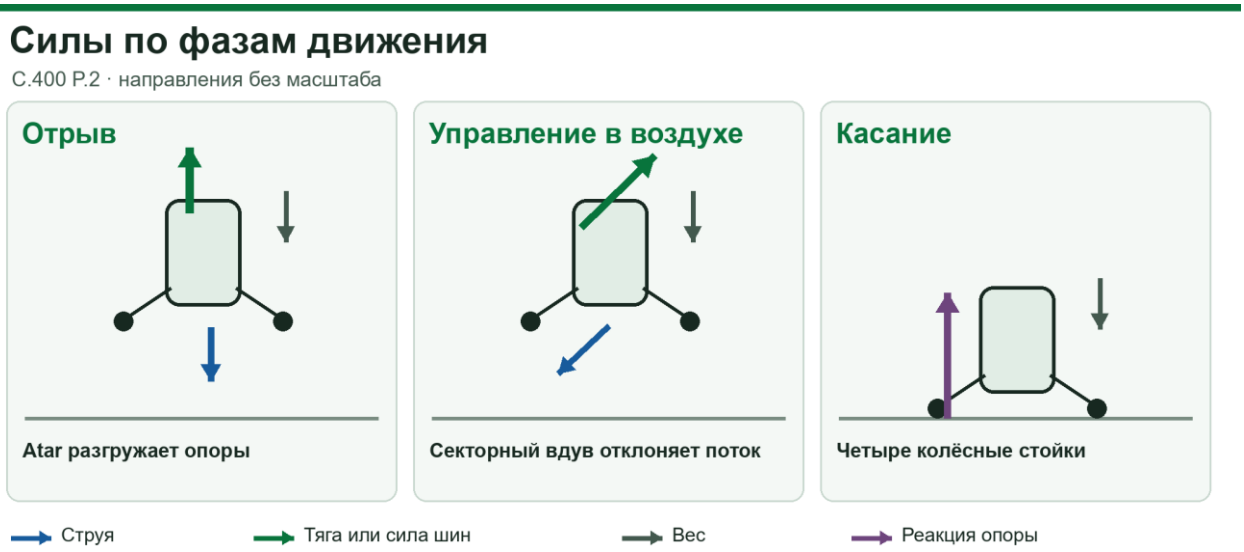

Functional drawing of directions. The length of the arrows is conditional. The physical status of each phase is refined in the text.

What is changing	How to read movement and strength
Rise	The main stream down unloads the supports. After the breakup, the difference between the vertical reaction and weight changes the vertical velocity.
Transfer	Redistribution by sector changes the direction of the jet. The side component carries the device, and the vertical fraction with the same full force decreases.
Rotation	The channel of rotation is the moment around the longitudinal axis close to the world vertical in hanging.

In P1 for both diagonals at 500 kg fuel, a stege and a given 54 km/h are received 6 min 55 s from separation to touch and 4.51 km to stop. The estimated balance is about 65 kg. With altered consumption and resistance, the range decreased to 3.88 km. Separate RR-H1/C6I in the same design materials refers to another machine and other tests.

Sources

F39 · Description of the Atlas

F40 · Audit R6E5

F41 · Flight results C400 R6E5 P1

C.400 P.2 · Landing Gear and Load Paths

Load, Payment and Repeatability of AI-CAD

Колёсные опоры и рама



Ортографическая проекция



Wheels on the load-bearing structure and the upper orthogonal projection.

Inspection section	Loading Path and Conditions
Reaction of the site	Four wheel supports transmit forces to the supporting structure around Atar. The different height of the wheels, when tilting, determines the first touchdown.
Two bases	The change in diagonal changes the shoulders of reactions and the geometry of the support. The same coincidence of the range in P1 does not equalizes the landing dynamics.
What to measure	For comparison of two assemblies, you need mass, inertia, center of resistance, consumption and actual reaction of racks. Comparison is performed under the same scenario conditions.

Design in AI-CAD TextToCAD

The design principle is to check the entire route from selection to the enforcement device. One beautiful surface does not show where the flow comes. Frame, ring tank, C3 channel and wheel supports should be linked to a specific chassis diagonal. The Detailed R6E1 engine model and the R6E5 assembly have different roles.

Atlas R6E5 connects the native section, the location of the collector and the slice of 5 250 mm. Ai-CAD TextToCAD allows you to compare BREp-streets and visual types of different assemblies without losing the engine audit. This speeds up the interface check between the parts of the documentation. Sector response maps and full cycle P1 are still read as separate calculations with their inputs.

C.400 P.2 · Verification and Evidence

Large plans and terms of the next set-off

Горячая часть Atar

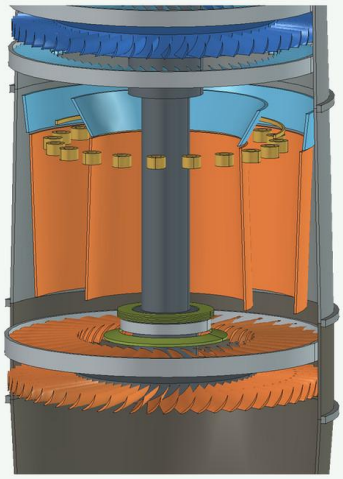

Отбор к коллектору



Close-up nodes from the native series. The angle and scale of each frame are selected for reading the details.

Verification	Result, area and required continuation
Chassis Base	Comparison 4 100 and 5 250 mm requires quantitative binding to assembly. In this atlas, the assembly of 5 250 mm is open.
From the sector to the time	The executive branches of the C3 are checked before the exit. To calculate manual control, you need a distribution and speed response when working together.
Row P1	The separation, touch and stop have individual events. When comparing 4.51 and 3.88 km, match the same determination of the final event and the inputs of resistance and flow.

Critically need resistance, the center of its application and expense. Before they are refined, the P1 scenario remains a digital comparison of specific productions.

Sources

F38 · Atlas RU

F39 · Description of the Atlas

F40 · Audit R6E5

F41 · Flight results C400 R6E5 P1

C.400 P.2 · Reading the Showcase

Viewing and sources



The starting screen of the project showcase "C.400 P.2". An interface that opens by link from this section is shown.

Screen or document	What to watch and what to check with
Atlas R6E5	First, open the overall assembly with a diagonal of 5 250 mm. Then go to the ring tank, the R6E1 engine and the C3 divorce.
C3 Insustion and Management	In execution cards, find sector blow and rotating tubes. Geometric wiring and the magnitude of the gas-dynamic response have separate bases.
Flight P1	Coupate the input kg 500, speed and weather conditions with the scenario table. Read the range to the stop separately from time to touch.

Sources

F38 · Open the design showcase

F170 · Full engineering atlas products

F38 · Atlas RU

F39 · Description of the Atlas

F40 · Audit R6E5

F41 · Flight results C400 R6E5 P1

Results and conclusions

CAD explains the Atar device, the selection branching and the connection of the chassis with the layout. For the historical conclusion of speed, range and landing, you need regime data related to a specific diagonal.

C.400 P.2 · Development History

Decision chronology and separately issued checks

How the project has changed

The historical residual transfer rate covers 8 758 files. The two initial assembling R6E1 was retained, and internal systems and interfaces specified in the R6E5 s diagonals of 4 100 and 5 250 mm.

For both assemblies, a nominal cycle P0 was prepared and the P1 s calculation is fully refueled. For the final 12 sheet atlas, one diagonal was chosen - 5 250 mm. The engine cut in the atlas goes back to the R6E1.

In a separate branch of the RR-H1 simplified model Roadster first showed a short flight. A related contact model revealed an excess of the touch speed and the outlet of the shock absorber. The altered profiles were then checked again.

Sources

F37 · Atlas Manifesto

F38 · Atlas RU

Sources

F38 · C.400 P.2. Atlas of sections and executive branches

F41 · C.400 P.2. Full cycle results P1

C.400 P.2 · Results and Limitations

R6E5 · diagonals 4 100 and 5 250 mm

4.51 km in the P1 script for two bases.

For C.400 R6E5, both diagonals in the P1 scenario at 500 kg fuel, the stal at 54 km/h given 6 minutes 55 s from the toe and 4.51 km to stop. The remainder was about 65 kg. With increased consumption and resistance, the range decreased to 3.88 km.

For ERR-H1/C6I in the late production of five scenarios in steps 6 and 12 ms, they fulfilled the requirements for lumen, touch, residue and endurance on four wheels. Ten successful numerical runs were compared at specified borders. The difference in the peak of the front left wheel reaction between the steps reached 12.56 kN in one scenario.

What Remains Open

For C.400, valid flow, resistance and position of the center of its application are open. For Roadster, the sensitivity of the load to step is preserved. The short RR-H1 cannot be counted in the main DEV45 series at 5 m.

The nearest decision

Clarify the aerodynamic and mass parameters separately for two assemblies of the C.400. According to RR-H1, assess the numerical sensitivity of peaks and associate the results with the same contact criteria.

Verification of materials on November 24. SHA-256 pages of the atlas coincided with the inventory. The original C.400 P1 calculation file is verified, the description of the atlas and a separate short-script Roadster protocol.

Sources

F39 · Description of the Atlas

F40 · Audit R6E5

F41 · Flight results C400 R6E5 P1

F42 · Separate comparative calculation ERR-H1

F43 · Late laboratory ERR-H1 s with five profiles

C.400 P.2 · Data and Method

R6E5 · diagonals 4 100 and 5 250 mm · Primary Materials

R6E5 examined two C.400 P.2 geometries. A 5250 mm support diagonal was selected for the final atlas. The separate RR-H1 case belongs to the Roadster study and is outside the C.400 results.

Full Screenplay P1

In both assemblies under specified conditions, the separation is 4.72 s, the first touchdown 419.75 s, rest 424.95 s. Path to the rest of 4511,4 m. The balance after the stop is 65.06 and 65.07 kg.

Consumption and aerodynamics are set by the model. The actual limit is not established.

Where to check - Table "Calculation value".

Sources

F41 · RESULTS_RU.md

Preservation of two assemblies

In the protocol, both copies 4100 and 5250 mm are reopened in FreeCAD 1.1.4 s TextToCADWorkbench. Each was attended by 560 objects and 524 Placement. The hashes of both R6E1 masters coincided with the original.

This is a test of the safety and discovery of specific models, not confirmation of historical interfaces.

Where to check - "Testing of work assembling".

Sources

F40 · README.md

C.400 P.2 · Evidence Review

R6E5 · diagonals 4 100 and 5 250 mm · Primary Materials

Atlas and the Origin of the Section

The atlas of 23.11.2026 contains 12 sheets of RU/EN and a single assembly R6E5 5250 mm. the longitudinal cut is taken from the R6E1 engine model.

The R6E1 and P1 flight have independent initial data and boundaries.

Where to check – “Configuration”.

Sources

F39 · README.md

Competing Roadster

The simplified RR-H1 gives 0.645 s and 3.22 m to the touch at an initial horizontal speed of 18 km/h. Checked the steps of 1 and 0.5 ms.

Kreen, tingeng and individual tire kinematics outside the model. The full DEV25 on 5 m remains 0/4.

Where to verify — “Short Flight of Roadster R5/C6I RR-H1”.

Sources

F42 · RESULTS_RU.md

Condition of the next decision

Primary measurements of the flow, aerodynamics and mass of both configurations are needed, after which the results should be reproduced separately for each setting.

SG1262

SG1262 · Native reconstruction of H62, five RB108 and three supports

SG1262 is a spatial farm with five vertical RB108. Their jets together create a rise. The air, selected from the power plant, is sent to the dispersed control posts. In order for the device to move sideways, the resulting traction must get a horizontal component. For return, it is important to extinguish the transfer and transfer the load through three supports.

Сборка H62

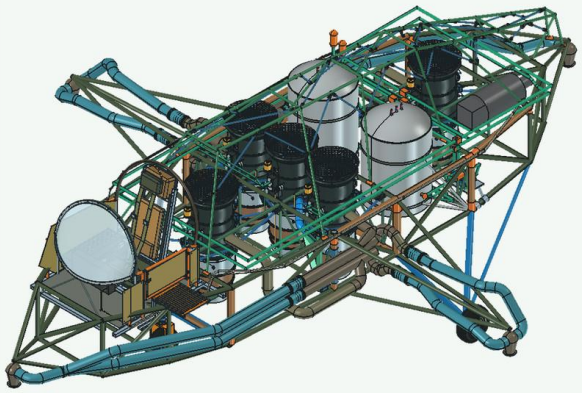

Разнесение систем

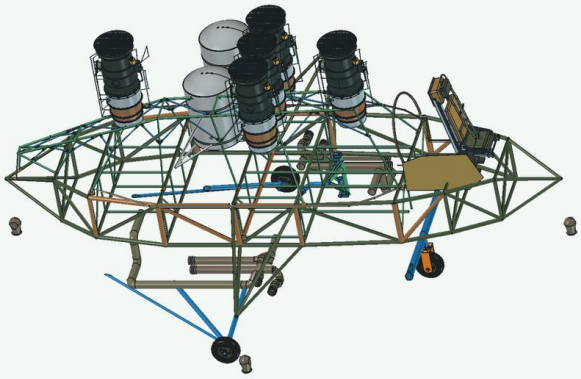

SG1262. General view and open or spun-drop assembly from the native atlas H62 · atlas R02.

Sources

F172 · Full engineering atlas of products

F171 · Nadal atlas and personnel passport

Showcase and fresh release check

In the single entry of H62 available 3D-flight, step-by-step lesson, positioning and catalog of materials. When returning from the lesson, the player saves the frame and angle. The catalog contains the atlas R02, CAD, STEP, FeedBack, telemetry and estimate.

Sources

Showcase of November 25

Open the point task mode

Single Showcase SG1262 H62

Method or record for updating

Native FeedBack from November 24

SG1262 · Technical and Economic Parameters

H62

The range and flow relate to the H62 model in the trance. The values from the script are not transferred to the historical copy. Production and operating prices in the passport are open.

Parameter	Value	Evidence
Length by X	9 084 mm	From CAD
Rolls-Royce RB108	5 pcs.	From CAD
Mass before launch with liquid fuel	3 900 kg	Scenario input
Time from separation to touch	585 s	Calculated
Distance at the residue of kg 100	4,47 km	Calculated
Fuel for a full nominal cycle	875 L	Calculated
Manufacture and integration	—	Unverified
Full cost of departure and program	—	Unverified

Sources

Full passport in the catalog · 73 lines

Project showcase passport

Current showcase release

SG1262 · CAD Views and Datums

Orthogonal photography and comparable physical scale

Спереди

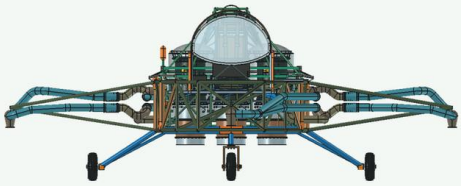

Слева

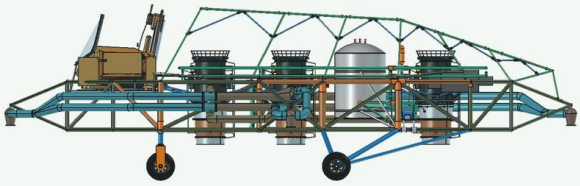

Front and left projections of CAD. On the sheet is designed one physical scale.

In projections, it is easy to trace the spatial distribution of branches and three supports. The functions of posts located on the farm should be specified in isolated frames, because the lateral and upper species do not show passes in the valves.

Сверху

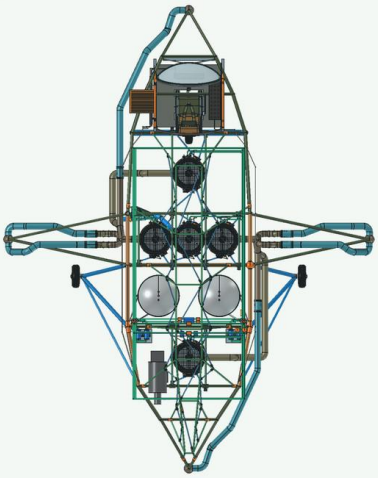

Снизу

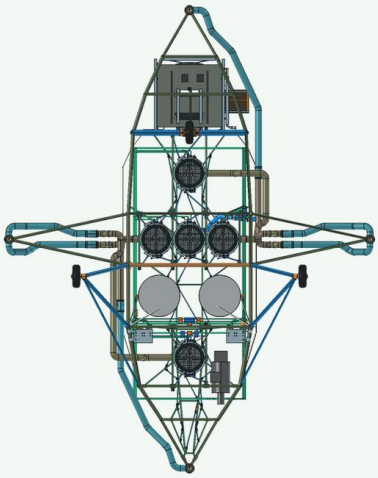

Upper and lower projections of the same stored revision. One physical scale is sustained.

Sources

F171 · Nadal atlas and personnel passport

F172 · Full engineering atlas of products

SG1262 · Layout and Assemblies

H62 · Atlas R02

Разрез RB108

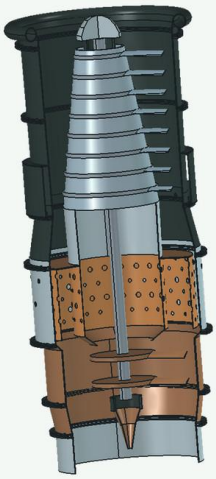

Баки и магистрали

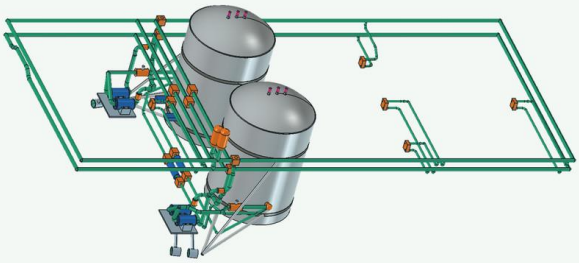

The section of the central RB108 and the H62 fuel arrangement.

Knot	Purpose and interfaces
Spaceframe	Engines, tanks, cabin and supports are based on a common frame. The dispersion shows the composition, and the actual place of the part is determined by the mounting view.
Central RB108	Axial CAD-cut excrets the body and mechanical connections of the running part. The five installed engines are considered together for balance, the original geometry of each node is checked by passport.
Stock and supply	Fuel tanks affect mass and alignment. The air circuit of selection is powered by engines and is considered separately from the fuel distribution.
Points of control	The footage of the cabin and sensor helps tie control and observed signals to geometry. Electrical characteristics and calibration have separate sources.

Sources

F171 · Nadal atlas and personnel passport

F46 · FeedBack Protocol

F47 · STEP Protocol

SG1262 · Airflow and Control

From the energy source to the response to the body

From the general lifting reaction of the five RB108, the contribution that is lost during the selection and rotation of the resulting one is deducted. Receivers and highways lead the selected air to four posts. When distributing between the front and rear channels give a moment along the tangerase, between the side - on the roll. The bandwidth and the actual channel of ying demand historical reasons.

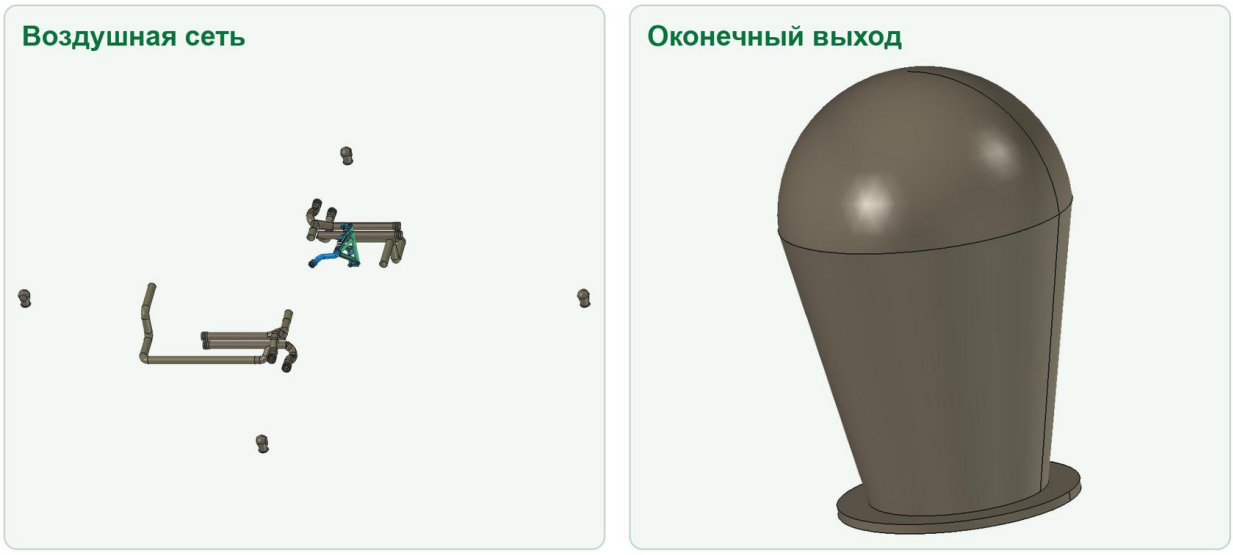

Control wiring H62 and close-up of the terminal nozzle.

Потоки и реакции

SG1262 · функциональная схема

Основная реакция

Пять входов RB108 → Пять газовых трактов → Струи вниз → Суммарная тяга

Контур управления

Воздух отбора → Ресиверы → Четыре поста → Моменты на ферме

Порядок и направление связей. Схема не задаёт геометрию каналов.

Explaining the scheme of functional connections. The sizes of the flow and geometry of the channels are determined by the primary materials.

Sources

F46 · FeedBack Protocol

F47 · STEP Protocol

F50 · Flight Calculation SG1262 H62

SG1262 · How It Works

CAD Close-ups and Functional Diagram

Five RB108 and Managing Selection



SG1262 · Five RB108 and Managing Selection. Footage of the H62 Atlas R02. The links are conditionally shown.

The working reaction of all five engines must be summarized taking into account the selection. The front and rear posts create moments on tanga, side - on the roll. The useful vertical component changes when inclined.

H62 reads the layout and settlement principle. The bandwidth and lyping channel require individual historical data.

Sources

Passport of native personnel and audit

Inslice of central RB108

Air and control

SG1262 · Showcase Screen

Reading System Behaviour and Telemetry

H62 Management Posts in Lesson

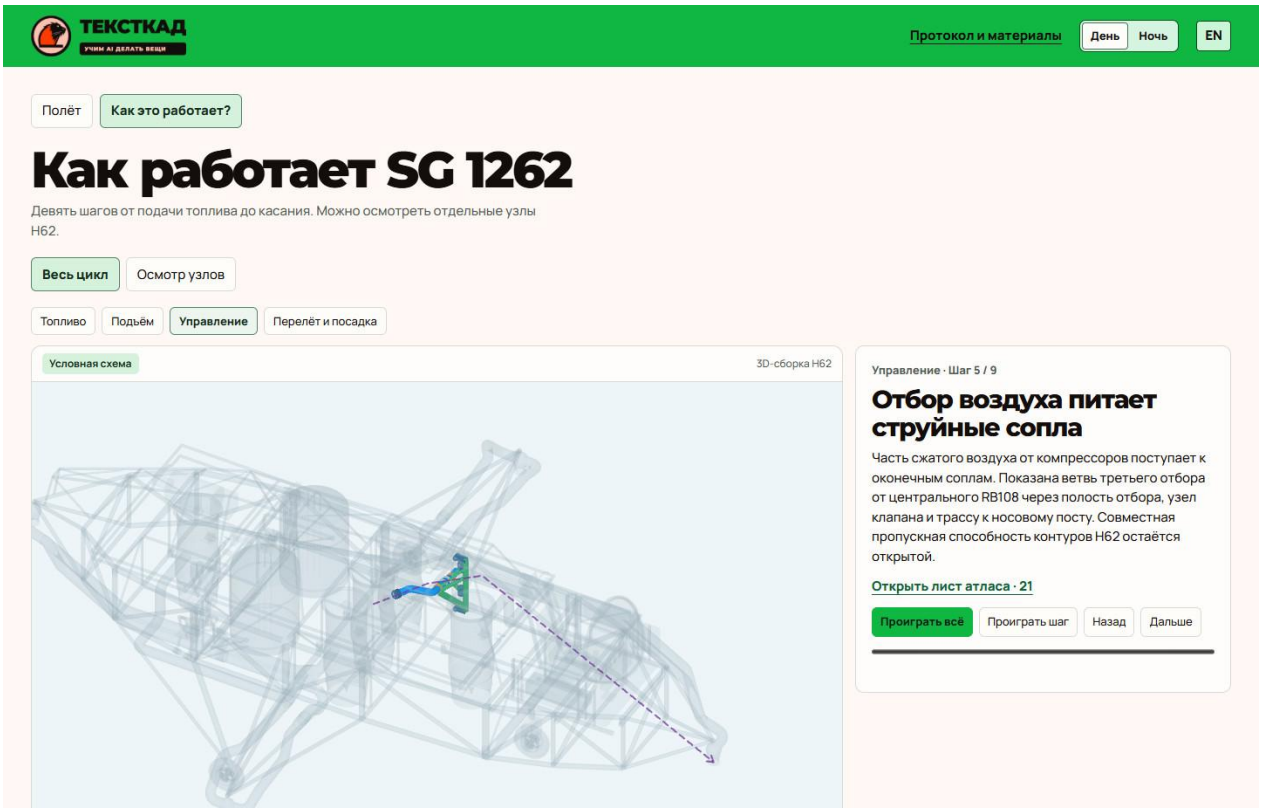

SG1262 H62 · control, step 5. Picture of the local showcase on November 25, 2026.

Find a control step in the title. In the form, compare the position of the posts with the boundaries of the farm and use the signature of the step to understand what axis of the turn the model shows.

Indications relate to the selected step or digital script of the showcase.

Sources

Open the local showcase

Indicative screenshot

SG1262 · Forces and Motion

Longitudinal, vertical and angular motion



Functional drawing of directions. The length of the arrows is conditional. The physical status of each phase is refined in the text.

What is changing	How to read movement and strength
Vertical	The total vertical component balances the weight in the hanging. The slope reduces its share even with the constant amount of power modules.
Tang and roll	The difference in strength at the fasts creates a moment with a large shoulder. Tank and mount can change the direction of the general vector.
Rising	The geometry of the branches confirms the position of the exits. The course limits and the necessary distribution of the workout should be checked according to the management data.

The H62 scenario uses conditional 3 900 kg of weight, 800 kg refueling and 36 km/h. Received 4.47 km for 9 min 45 s from the separation to touch. The 3D scene is depressed at a range 80 times, so you need to read the number from the telemetry panel. The run demonstrates a temporal sequence, and the established traction and selection loss require their own verification.

Sources

F51 · Description of the Atlas H62 R02

F112 · Atlas SG1262 H62 R02

F119 · Native CAD build for shooting. SG1262_H62.FCStd

SG1262 · Landing Gear and Load Paths

Load, Payment and Repeatability of AI-CAD

Ферма и три опоры

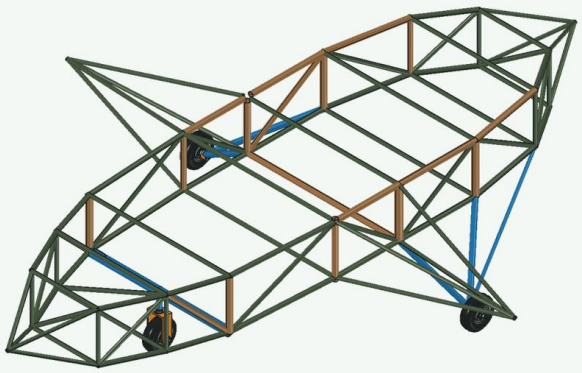

Разрез датчика

Three H62 supports in the context of the farm and the sensor cut.

Inspection section	Loading Path and Conditions
Three contacts	The strength of the wheels are in the lower farm. The position of the center of the masses and orientation to the site affect the sequence of contacts and the redistribution of the reaction.
Exchange AP242	Of the 8 626 Valid bodies, 8 625 coincided in tolerance. On one spherical trimming E4_GuardMountLeg_3, 0.01146 mm was obtained at the criterion of 0.005 mm.
Reception border	The reconciliation of eight target pairs and 22 adjacent gaps has a local area. The native FeedBack remained partial, and a separate issue notes a local deviation.

Design in AI-CAD TextToCAD

For five engines, the general bases of the farm, the geometry of installation and the traceability of the selection branches are significant. When designed, each historical uncertainty should be noted next to its CAD object. When exchanged, the integrity of bodies, the convergence of geometry and the tolerance of a particular surface are checked.

For H62 after the return import of AP242 received 8 626 valid bodies. The coincidence in the tolerance is confirmed for 8 625. One boundary result 0.01146 mm is compared with tolerance of 0.005 mm and localized on a specific face. In the AI-CAD TextToCAD, a native FeedBack and independent exchange reconciliation allow you to accurately state what the recipient will be able to repeat. The status of the full-time FeedBack partial retains an open question.

SG1262 · Verification and Evidence

Large plans and terms of the next set-off

Пилотская часть

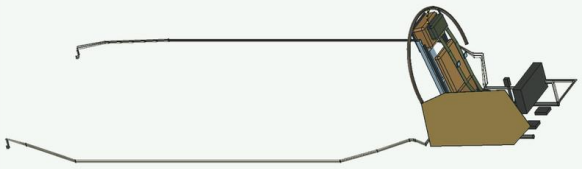

Разрез датчика

Close-up nodes from the native series. The angle and scale of each frame are selected for reading the details.

Verification	Result, area and required continuation
Welded and installation connections	In the H62, eight pairs and 22 adjacent gaps have their own inspection area. The withdrawal cannot be transferred to all the farms.
Form after exchange	For E4_GuardMountLeg_3, a separate localization of deviation is recorded. Resigning in the target CAD should use the same criterion of 0.005 mm.
Profile of movement	The player compresses the visual route, and the table gives 4.47 km. On the ground, three contact points are compared, the range is taken over telemetry.

Two independent tasks remain for the new findings. It is necessary to confirm the permissible deviation of STEP on the specified vertecosant and obtain data of the control selection.

Sources

F46 · FeedBack Protocol

F47 · STEP Protocol

F50 · Flight Calculation SG1262 H62

F51 · Description of the Atlas H62 R02

F112 · Atlas SG1262 H62 R02

F119 · Native CAD build for shooting. SG1262_H62.FCStd

SG1262 · Reading the Showcase

Viewing and sources

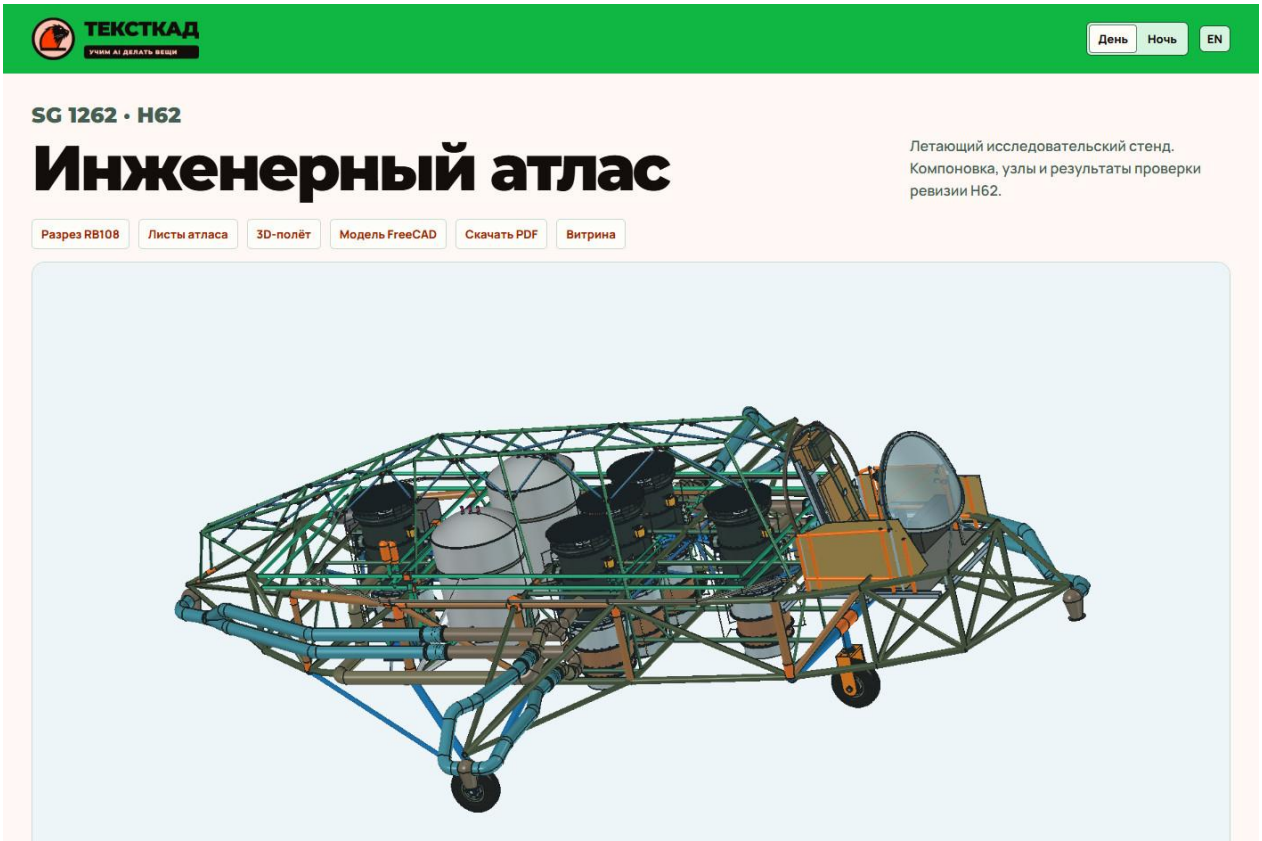

The starting screen of the design showcase "SG1262". An interface that opens by link from this section is shown.

Screen or document	What to watch and what to check with
Atlas H62 R02	Open the assembly, dispersion and the central RB108. Then, follow the path to the final exit on the selection sheets.
Flight Profile	In the player remember the conditional scale of the mapping of the route. Check the results with the calculated protocol in time, mass and range measurement.
Geometry of exchange	Open the STEP Reverse Import Protocol. Separately check the validity of bodies, the deviation of the selected facet and the contents of the coupling check.

Sources

F112 · Open the design showcase

F172 · Full engineering atlas of products

F46 · FeedBack Protocol

F47 · STEP Protocol

F50 · Flight Calculation SG1262 H62

F51 · Description of the Atlas H62 R02

F112 · Atlas SG1262 H62 R02

F119 · Native CAD build for shooting. SG1262_H62.FCStd

Results and conclusions

H62 clearly documents the visible assembly and position of the branches. The next stage requires confirmation of historical interfaces and managing costs, together with the analysis of the local deviation of the exchange.

SG1262 · Development History

Decision chronology and separately issued checks

How the project has changed

In the original H61 - 9 542 objects. 75 open positions were dismantled. The audit covered 3 647 pairs, and another 8 959 were outside the scope of the inspection. With a lack of archival data, reconstructive decisions were labeled as assumptions.

In the sections H62, groups of pairing couplings of pumps, supports and sensors were sequentially redesigned. Eight disputed couples required an independent geometric test. When reopening the final assembly, the previous protocol retained 9 542 objects.

After the native FeedBack and a separate STEP AP242 released an autonomous window. The Atlas rose from 18 to 29 sheets in R02. It is adjacent to the section, the history of adjustments, the exchange of STEP and the comparison with the museum exhibit.

Sources

F45 · H62 Release Register

F46 · FeedBack Protocol

Sources

F50 · SG1262 H62. Forces, mass and phase calculation

F47 · SG1262 H62. Geometry of reverse import AP242

SG1262 · Results and Limitations

H61 → H62 · R02 atlas

The return import of STEP passed 8 625 of the 8 626 bodies in tolerance.

After the retro-importion of AP242 received 8 626 valid bodies. Geometric reconciliation in tolerance passed 8 625. On the spherical boundary trimming E4_GuardMountLeg_3, 0.01146 mm was obtained with a criterion of 0.005 mm. The validity of the body and the coincidence of its geometry were checked separately.

The status of a separate issue is VERIFIED_WITH_LOCAL_DEVIATION. The regular FeedBack retained the partial after failure of the built-in STEP check. The check of the saved H62 included eight target pairs and 22 adjacent gaps.

The H62 scenario at a conditional mass of 3 900 kg, refueling 800 kg and speed 36 km/h gave 4.47 km for 9 min 45 s from separation to touch. The length of the route in the 3D player is visually compressed by 80 times. The number range should be read by telemetry.

What Remains Open

Archival information is not enough to confirm a number of mounts. The exchange checked the visible assembly in reverse mode. Unverified pairs and local tolerance exceed their initial statuses.

The nearest decision

Disassemble the deviation of a specific facet in the target CAD system. For historical conjuries, request dimensional or photographic bases with reference to execution.

Verification of materials on November 24. SHA-256 separate STEP recalculated and coincided with RELEASE.json. Verified the protocol of return import and description of the final atlas. Geometric calculations of the release within the review were not repeated.

Sources

F47 · STEP Protocol

F48 · Input H61

F49 · Protocol of eight pairs H62

F50 · Flight Calculation SG1262 H62

F51 · Description of the Atlas H62 R02

F52 · Comparative release of H62 and Roadster

SG1262 · Data and Method

H61 → H62 · Atlas R02 · Primary Materials

SG1262 H61 was tested as a geometric reconstruction; H62 is a separate branch of improvements, and the historical authenticity of individual nodes remains a subject of reconciliation.

H61 Audit Area

3647 pairs were checked. 75 initial positive intersections remained open. Another 8959 pairs of routes with their own engine shell were excluded.

The historical presence of an intersection in the database does not mean its engineering acceptability.

Where to verify — expanded_pairs_tested · expanded_positive_pairs_open · excluded_own_engine_envelope_pairs.

Sources

F48 · release_scope_gate.json

Reverse import of STEP

At E4_GuardMountLeg_3, the spherical face trim differs locally by 0.011463244 mm against a 0.005 mm tolerance. Both solids are valid.

This local result does not allow to declare an unconditional coincidence of the exchange.

Where to check - "Reverse import of STEP".

Sources

F46 · PROTOCOL.md

SG1262 · Evidence Review

H61 → H62 · Atlas R02 · Primary Materials

Flight H62

With a starting mass of 3900 kg and the conditional residue of 100 kg, the nominal flight is 4.47 km and 9:45 from the margin to touch. For the full cycle, the model consumes kg 700.

The cost of the installed system and controllability require independent data. This is not a historic record.

Where to check - "Sourity data" and the first paragraph.

Sources

F50 · CALCULATION.md

Final Atlas

The issue of 23.11.2026 contains 29 sheets, including the history of H62 edits, flight scenarios boundaries and FCStd/STEP check.

The sheets show the original models and results of the project, without confirming the historical details without primary sources.

Where to check - the first paragraph of README, issue R02.

Sources

F51 · README.md

Condition of the next decision

Closing requires identified archival angles and sizes, re-checking of excluded pairs and permission of the local STEP deviation in the agreed tolerance.

XJ314

XJ314 · two Nene, three main issues and R11-G1 supports

XJ314 is a two-engine test rig. The forward Nene supplies two main outlets, and the rear Nene supplies one central outlet. Control air feeds four outboard stations. The aircraft has two distinct load paths: from thrust into the frame in flight, and from the wheels through forks and struts into the frame at touchdown.

Общая сборка R11-G1

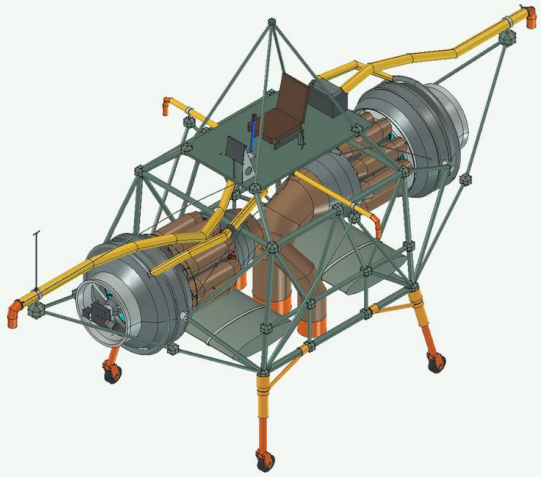

Разнесение систем

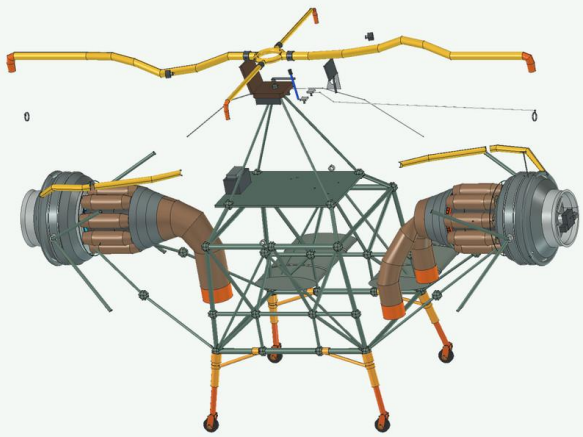

XJ314. Overall view and open or exploded assembly from the native R11-G1 atlas.

Sources

F174 · Full engineering atlas products

F173 · Nadal Atlas and Personnel Passport

Showcase and fresh release check

The single showcase RU/EN binds Hucknall, point-to-point flight, failure scenarios, F/R valves, slow landing and R11-G1 materials. On the overall scale, the reactions of each support and an equivalent move are calculated. The historic flight and the P1 digital outrages are signed separately.

Sources

Showcase of November 25

Open the point task mode

Single Input XJ314 and Landing Scale

Method or record for updating

Native FeedBack from November 24

XJ314 · Technical and Economic Parameters

Hucknall 1954 / RAE / R11 and G1

Late RAE data and early Hucknell's calculation are tied to different configurations. The amounts are given for the chosen reconstruction scenario.

Parameter	Value	Evidence
Dimensions D × W × V	7,912 × 3,262 × 4,675 m	Reconstruction of CAD
The historical empty mass	Not installed	Unverified
Flight mass RAE	≈3 447 kg (7 600 lb)	Late RAE
Starting weight with liquid fuel	3 600,92 kg	R11 calculation
Calculated time in the air	590,215 s (-9 min 50 s)	R11 calculation
The cost of fuel for nominal running	≈104 829 ₽	Scenario estimate
Development / production of one copy	≈15.41 / 29.03 million ₽	Scenario estimate
Program / Average Cost of Attempt	≈97.62 / 2.44 million ₽	Scenario estimate

Sources

Full passport in the catalog · 55 lines

Project showcase passport

Current showcase release

XJ314 · CAD Views and Datums

Orthogonal photography and comparable physical scale

Спереди



Слева

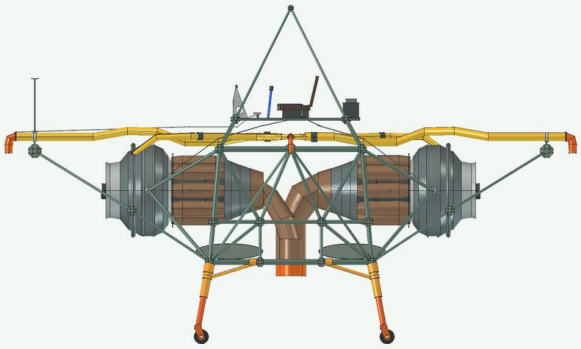

Front and left projections of CAD. On the sheet is designed one physical scale.

The side view connects the front two rays and the central rear with the shoulders relative to the body. On the form below it is easier to trace the front fork, lower attachments and external end of selection.

Сверху

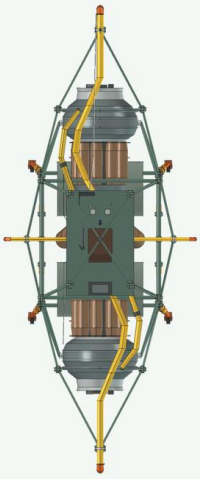

Снизу



Upper and lower projections of the same stored revision. One physical scale is sustained.

Sources

F173 · Nadal Atlas and Personnel Passport

F174 · Full engineering atlas products

XJ314 · Layout and Assemblies

R11-G1

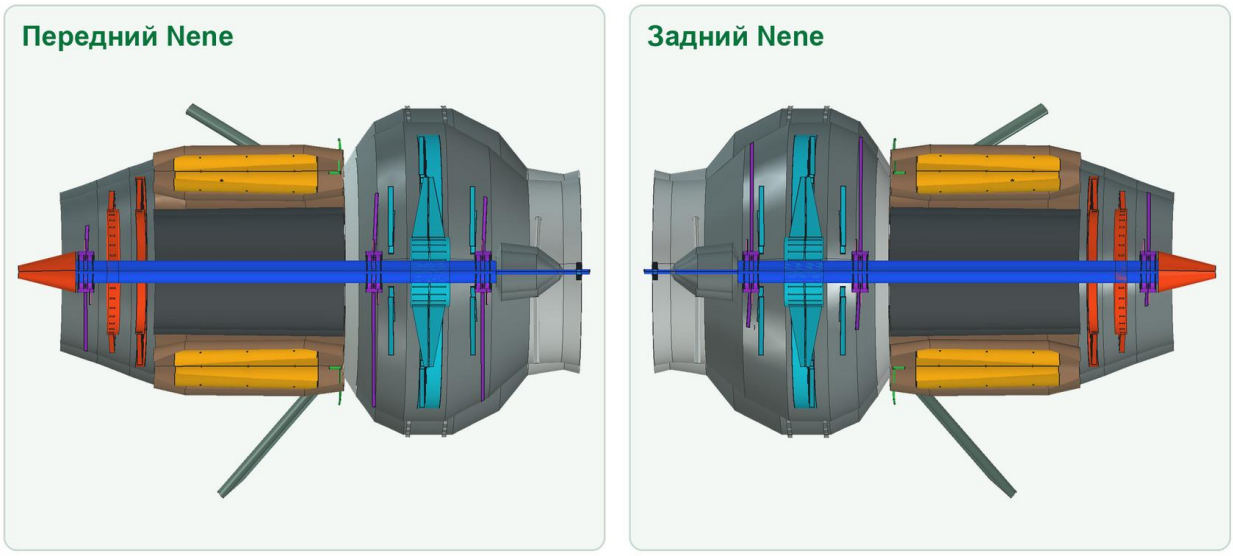

Axial incisions of both Nene. Geometry in reconstruction is based on the analogue of Nene II.

Knot	Purpose and interfaces
Engines and releases	On two axial sections, the directions of the Nene installation are visible. Detailed research on the analogue of Nene II. When reading the general frames, trace the front unit a fork tract, from the rear - central release.
Farm and Pilot Post	The active assembly shows how tanks, power units and cabin divide the space. Removals on a splashed illustration serve to read the composition.
Controls of the Branches	The collector leads the selected air to the space-dispersed endings. The total reaction of major issues and management points are discussed jointly.
Reinforced chassis	The G1 changes the proven local nodes. Geometry of the axis, upper joint and forceful connection to the frame still refers to the general reaction path.

Sources

F173 · Nadal Atlas and Personnel Passport

F54 · R11 baseline protocol

F55 · G1 Strengthening Protocol

XJ314 · Airflow and Control

From the energy source to the response to the body

In the front force branch, the flow is divided between the two main issues. The rear branch gives the third lifting reaction. Their lines of action have different shoulders, so a change in one feed can give a different lifting and a new point. The management branch of selection creates its moments. It is not obliged to compensate for the loss of the power branch in every state.



Main editions and control air branches XJ314.

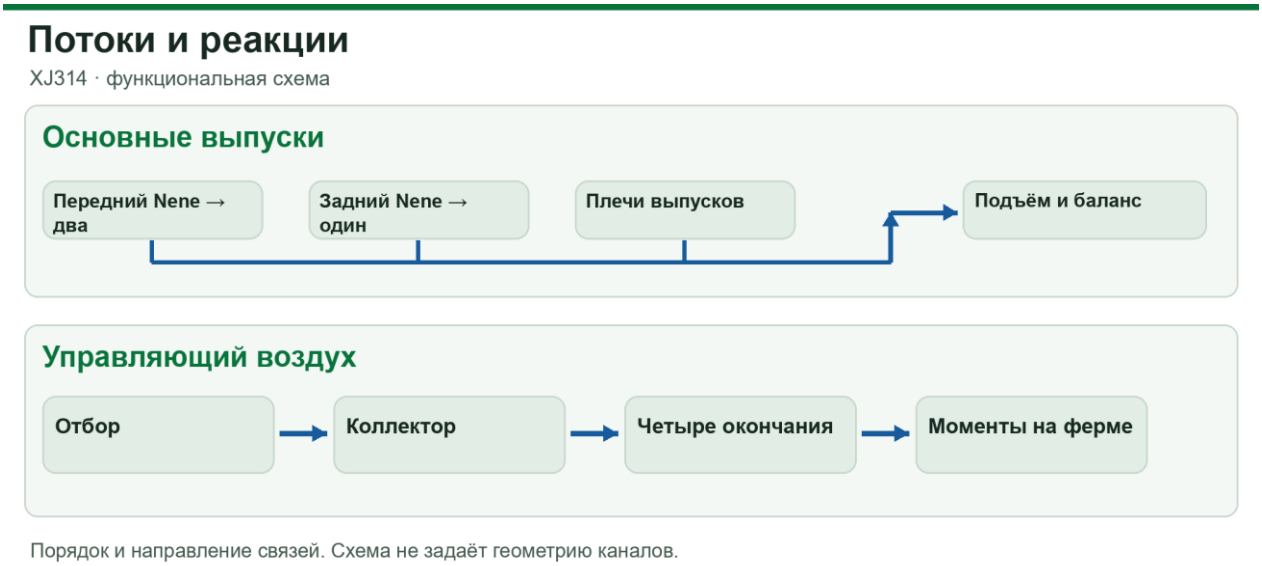

Explaining the scheme of functional connections. The sizes of the flow and geometry of the channels are determined by the primary materials.

Sources

F54 · R11 baseline protocol

F55 · G1 Strengthening Protocol

F58 · Final atlas XJ314 R11-G1

XJ314 · How It Works

CAD Close-ups and Functional Diagram

Two Nene and three main issues

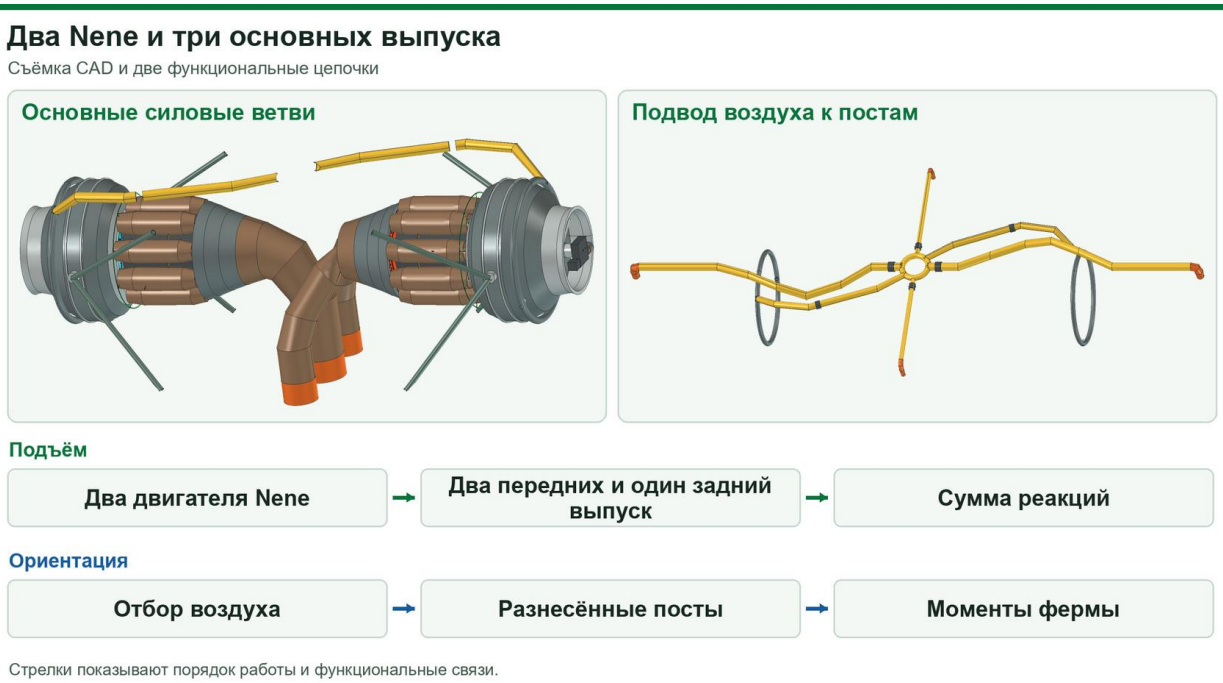

XJ314 · Two Nene and three main issues. Atlas R11-G1 The links are conditionally shown.

The front Nene is associated with a pair of major releases, the rear one with the third. Changing one filing can simultaneously reduce the total ups and change the tang and change the tang. The response of the management posts is formed with this point.

The phases of the calculated scenario and the historical record of Hucknel are checked by individual sources.

Sources

Passport of native personnel and audit

Engines and main issues

Air Branches of Control

XJ314 · Showcase Screen

Reading System Behaviour and Telemetry

Rise and control XJ314

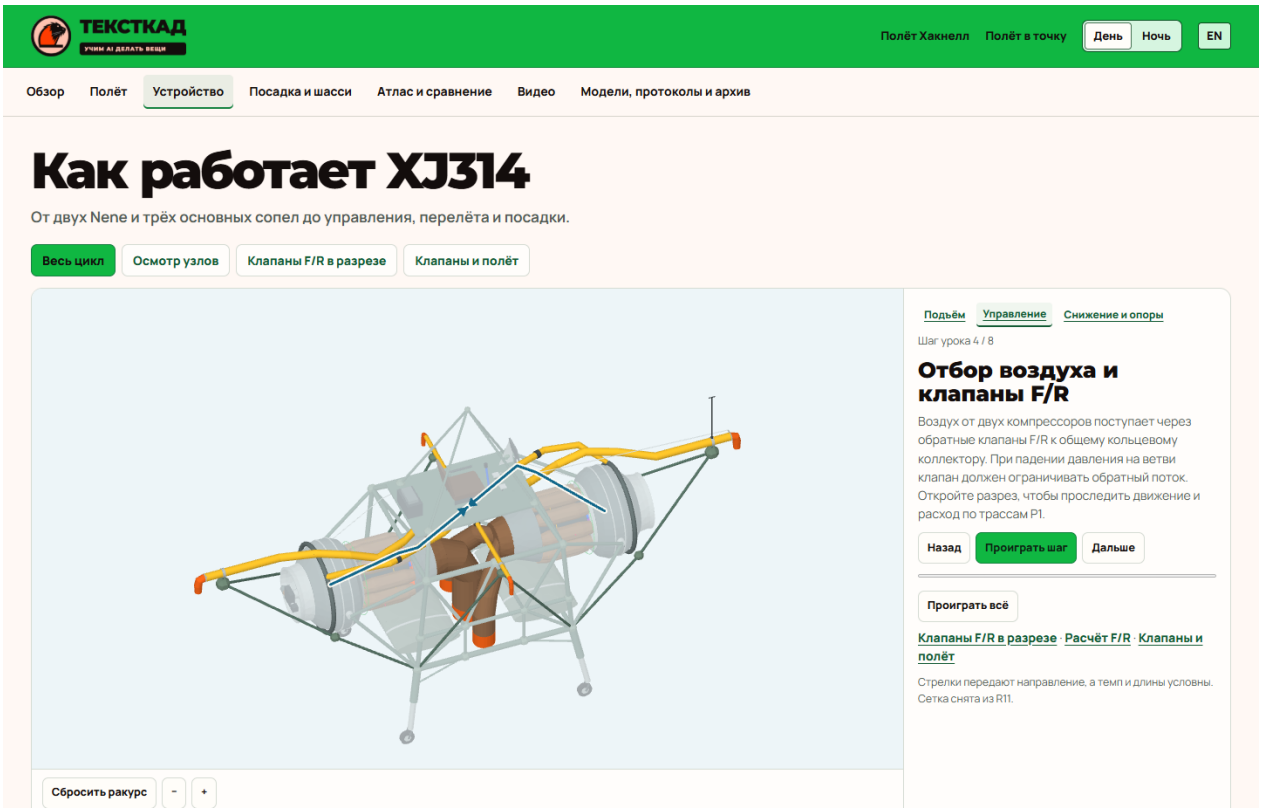

XJ314 · lesson, step 4. Picture of the local showcase on November 25, 2026.

On the screen of the lesson, compare the name of the active step with the dedicated power group. In the "Class and Flight" mode, the position of the nodes and the moment on the overall scale are additionally compared.

Indications relate to the selected step or digital script of the showcase.

Sources

Open the local showcase

Indicative screenshot

XJ314 · Forces and Motion

Longitudinal, vertical and angular motion



Functional drawing of directions. The length of the arrows is conditional. The physical status of each phase is refined in the text.

What is changing	How to read movement and strength
Vertical	Vertical reactions of the three main issues are developed. When the mode of one Nene changes, the total lift reserve changes.
Tang and roll	The front and hind effects differ in the shoulder in length, lateral in width. The difference in influence changes the tilt and horizontal component of the total force.
Refusal	To conclude about compensation, actual selection restrictions are needed, the moment on each ax and the reaction speed. The geometry of the installation gives only part of the inputs.

The screen of historical animation lasts 600 s, in a given profile 590,215 s without support. These values relate to the formulation of animation. The short 32-second series of failure studies has its own time marks. When comparing, you first need to name the series and engine mode, then check the time and load.

Sources

F58 · Final atlas XJ314 R11-G1

F105 · Failure to be postponed

F120 · Native CAD build for shooting. XJ314_R11_G1.FCStd

XJ314 · Landing Gear and Load Paths

Load, Payment and Repeatability of AI-CAD



Installed supports and a basement power node of G1 revision.

Inspection section	Loading Path and Conditions
The Power Path	The load passes from the contact spot through the wheel, axis, feathers of the fork, the rack and its upper connection to the farm. You need to check each link under one reaction.
Comparison R11 and G1	The root of the front fork in the original estimate had 542.9 MPa and a margin of 0.65 at a share of 60% on the feather and the received turnover 355 MPa. The minimum conditional stock of G1 checked cross-sections reaches 2.47 at a target of 1.5.
Boundary of Refinement	Fixation of axis, material, upper joint and reactions after failure remain separate evidence. The local stock cannot be transferred to all the load paths.

Design in AI-CAD TextToCAD

The power pathway is tracked from the contact spot to the farm, and then the areas with local concentration are checked. The correction of the fork should be issued by a separate audit. To protect the result, you need to maintain the same reactions, the share of the load, the properties of the material and the place of application of the effort.

The R11-G1 atlas shows both Nene incisions on a general scale, and the calculation of the G1 is tied to the specific root of the forks. In the AI-CAD TextToCAD, it is convenient to bind through the native branch, the exact host identifier and the invaded comparison inputs. The engineer sees which area is really tightened, and what connections and loads still require confirmation.

XJ314 · Verification and Evidence

Large plans and terms of the next set-off

Пост пилота



Локальное усиление G1



Close-up nodes from the native series. The angle and scale of each frame are selected for reading the details.

Verification	Result, area and required continuation
Fork root	The figures of 0.65 and 2.47 relate to the conditional stock of locally tested options. To repeat, the load, the share of the feath, the fluidity and the site of the result extraction are maintained.
Upper Accession	After strengthening the lower section, the load is still transmitted over the axle, rack and upper support. In the production inspection, reactions must be traced to the frame.
Two scales of time	600 s historical animation and 32 s bounce studies are different series. Mixing the phases hides which loads and engine mode are given.

The next test should check the physical properties of the support and upper junction on the same forces that justified the strengthening of the G1.

Sources

F54 · R11 baseline protocol

F55 · G1 Strengthening Protocol

F58 · Final atlas XJ314 R11-G1

F105 · Failure to be postponed

F120 · Native CAD build for shooting. XJ314_R11_G1.FCStd

XJ314 · Reading the Showcase

Viewing and sources

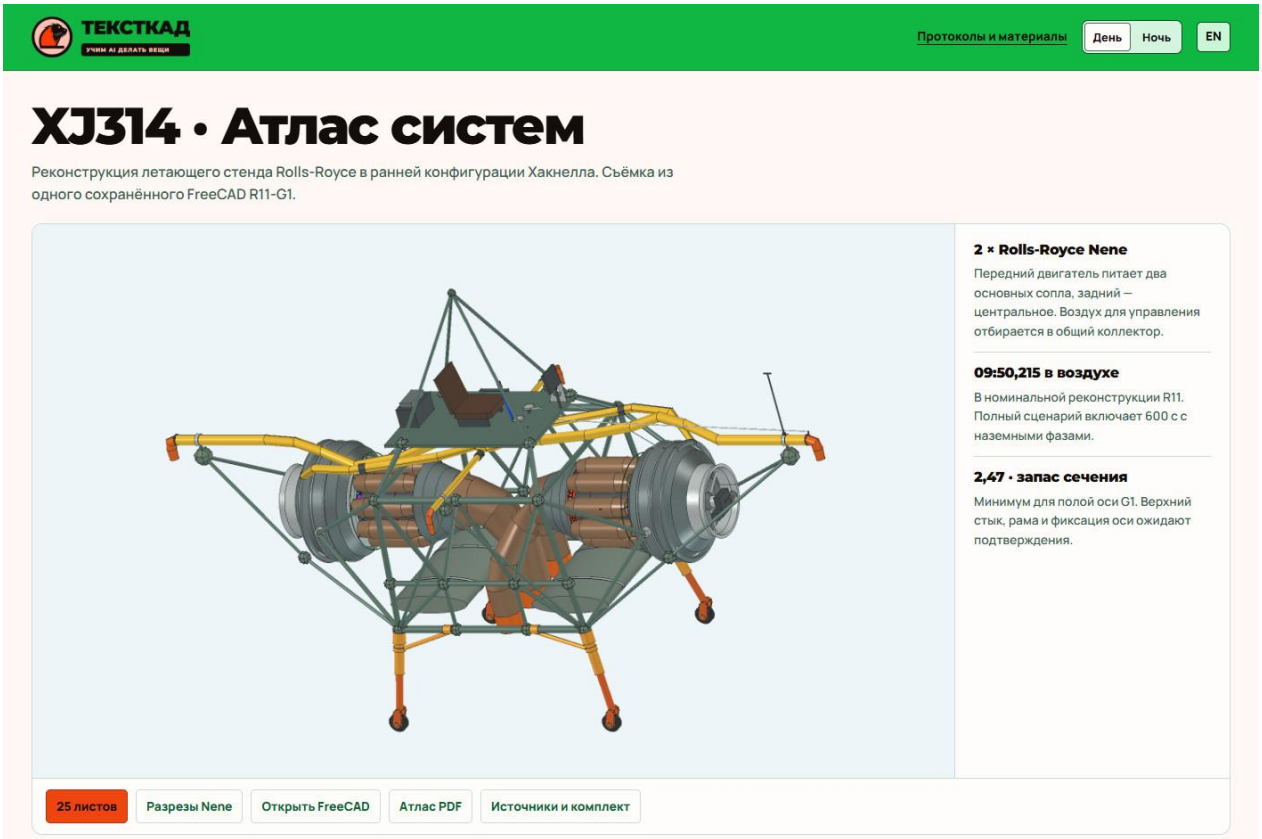

The starting screen of the design showcase "XJ314". An interface that opens by link from this section is shown.

Screen or document	What to watch and what to check with
Atlas R11-G1	Open the separation of systems and two separate Nene incisions. In the overall frame, find the distribution of three issues.
Selection and support	Compare the end branches and supports. On the power frame, move from the wheel to the top point of the rack, then to the R11 and G1 protocols.
Different time series	Read the denial research in your own scenario. For historical animation, first check the conditions of the phases, then use the amount of time in its area.

Sources

F58 · Open the design window

F174 · Full engineering atlas products

F54 · R11 baseline protocol

F55 · G1 Strengthening Protocol

F58 · Final atlas XJ314 R11-G1

F105 · Failure to be postponed

F120 · Native CAD build for shooting. XJ314_R11_G1.FCStd

Results and conclusions

G1 improves the calculated result of the selected portions of the support. The readiness of the chassis depends on the confirmation of reactions, material and the transfer of effort to the farm. Bandage management requires a separate calculation.

XJ314 · Development History

Decision chronology and separately issued checks

How the project has changed

The R11 separately considered nominal mode and failures. After the question of the duration of the flight, the authors diluted a short scenario of failure and the historical reconstruction of Haknell. A source for departure on August 3, 1954 indicates almost ten minutes in the air.

Landing check showed a high reaction in the traction loss scenario during side transfer. In the R11 appreciated the root of the fork, then created a separate G1. Preserved materials can compare both productions.

The final bilingual R11-G1 attribute has grown to 25 sheets. The front and rear Nene are shown in sections of the same scale. The internal device is reconstructed according to the analogue of the Nene II.

Sources

F54 · R11 baseline protocol

F55 · G1 Strengthening Protocol

Sources

F58 · XJ314. Atlas of power branches, engines and chassis

F55 · XJ314. Local comparative calculation of the plug G1

XJ314 · Results and Limitations

R11 → R11-G1

The estimated stock of the checked section increased from 0.65 to 2.47.

In historical animation, 600 s full record accounts for 590,215 s without support. The route and time of the phases are set by the authors. The short 32-second failure research scenario has its own scale.

As a case for the original R11, the front fork root received 542.9 MPa and a conditional reserve of 0.65 at 60% load per one pen and the received turnover 355 MPa. In G1, the minimum conditional stock of checked cross-sections was 2.47 at a target value of 1.5.

What Remains Open

Critical questions relate to the fixation of the axles, the upper connection of the rack and the transfer of load to the frame. The material, characteristics of post-faste and reactions are based on assumptions.

The nearest decision

Confirm the material and properties of supports. Trace the load to the frame on the same configuration that gave a critical reaction, and separately check the top joint.

Verification of materials on November 24. The G1 file was found, its SHA-256 recalculated. The protocols of the original and reinforced fork and the summary protocol of the showcase are verified.

Sources

F56 · Native model G1

F57 · Consolidated China Protocol

F58 · Final atlas XJ314 R11-G1

XJ314 · Data and Method

R11 → R11-G1 · Primary materials

In XJ314, the historical reconstruction and traction of R11 are delimited; a separate G1 shows a response to the found weakness of the chassis section.

Incoming weak cross-section

In the failure scenario, the root of Fork_3_1 at 60% load per one feather reached 542.9 MPa. 0.65 at Rp0.2 355 MPa.

The ball model does not describe plastic redistribution and destruction.

Where to check - the first paragraph and "Comparison".

Sources

F54 · README.md

Separate G1 amplification

The combination of feathers and rack eliminated the model gap, the minimum conditional reserve of checked sections was 2.47 at the target of 1.5.

The upper joint and transfer of the load to the original frame remain unconfirmed.

Where to check - "Cantion in a separate copy".

Sources

F55 · README.md

XJ314 · Evidence Review

R11 → R11-G1 · Primary materials

Refusal to transfer

In the model, after the complete loss of traction during the transfer, the first touchdown came through 0.967 s, the centre of mass was 2.20 m below the nominal value.

Instant failure and the behavior of the supports are set in the model. This is not the telemetry of the historical apparatus.

Where to check - "Results".

Sources

F105 · README.md

Difference between model and testimonies

The report links a 600-second reconstruction, 590,215 s without support and R&M 3336 archival report. Historical evidence describes the duration entourage.

The exact profile of movement and second in the air refers to modeling, not a proven historical timing.

Where to check - Line "Hucknall, 1954".

Sources

F57 · PROTOCOL.md

Condition of the next decision

It is necessary to confirm the material and real connections of the supports and frames, then compare the dependent calculations with the primary materials of Haknell according to a specific configuration.

Ludion 002

Ludion 002 · two esketors Bertin, handles and cradle R10

The Ludion lifts the pilot with a reaction of two ejectors. The primary flow of the gas generator involves the outside air, after which the mixed flow goes down. In the reconstruction, the left handle changes the general regime, the right one deploys the output panels to change course, and the biaxial cradle allows you to tilt the power plant relative to the pilot part.

Общий вид 002



Газогенератор и эжекторы

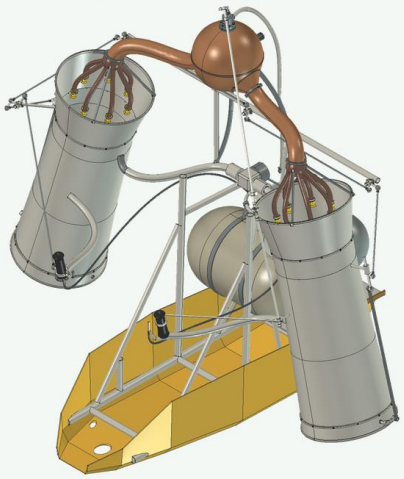

Ludion 002. General view and open or sprawling assembly from the native atlas R10.

Sources

F176 · Full engineering atlas of products

F175 · Nadal Atlas and Personnel Passport

Showcase and fresh release check

The overall showcase combines flight, a lesson of 12 steps, placing a target with the wind, comparison and library. When consolidating, the reading of the side displacement with a 3D player is corrected. In the calculation of the touch, the intersection of the plane with a reference point is separately noted, the physical contact of the racks by this result is not confirmed.

Sources

Showcase of November 25

Open the point task mode

Single showcase Ludion 002

Method or record for updating

Native FeedBack from November 24

Ludion 002 · Technical and Economic Parameters

CAD R10 / trajectories R13.2

Time and path are taken from the published episode, acceleration - from the R13.2 scripts. The budget refers to a digital and inert screening.

Parameter	Value	Evidence
Length by X	1843,7 mm	Measured in CAD
Empty vehicle	76 kg	Published
Take-off mass on the tests	213–215 kg	Published
Time in the air	32 s	Published
The Road in the Same Departure	190 m	Published
Peak longitudinal scenarios	1,011 / 0,983 / 0,961 m/s²	Scenario
Budget Example · Russia	294 223,98 RUB	Scenario
The actual cost of departure and refueling	—	Open

Sources

Full passport in the catalog · 57 lines

Project showcase passport

Current showcase release

Ludion 002 · CAD Views and Datums

Orthogonal photography and comparable physical scale

Спереди



Слева



Front and left projections of CAD. On the sheet is designed one physical scale.

In the projections, nose, supports and two exhaust devices have a common laper. Turning around the cradle axis and the position of the two panels is better to track step on the window. Orthogonal images set the initial position.

Сверху

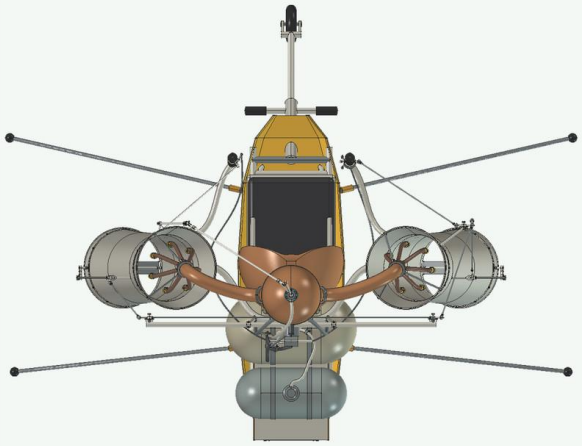

Снизу

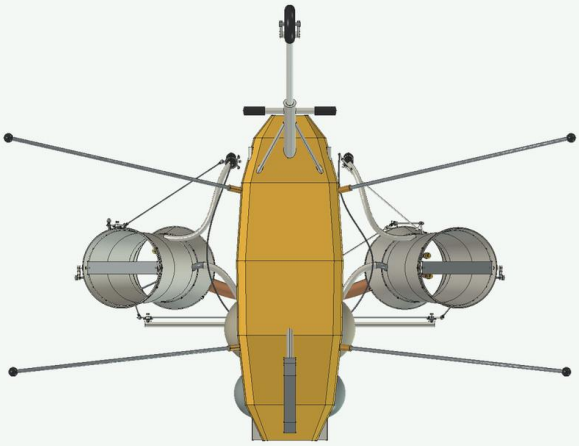

Upper and lower projections of the same stored revision. One physical scale is sustained.

Sources

F175 · Nadal Atlas and Personnel Passport

F176 · Full engineering atlas of products

Ludion 002 · Layout and Assemblies

R10

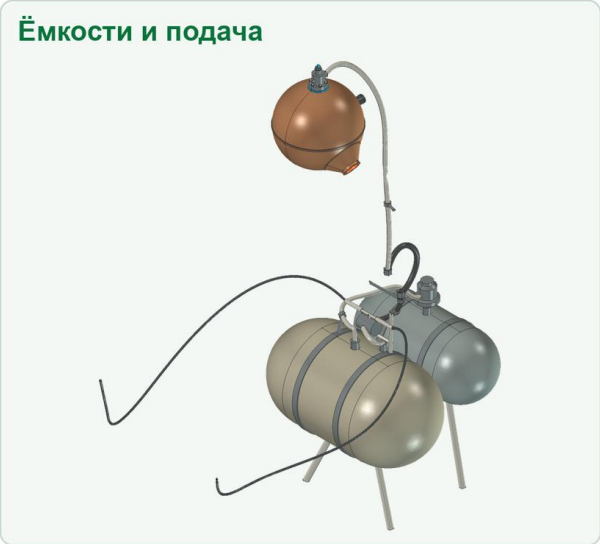

Location of containers, supply and two ejectors in R10.

Knot	Purpose and interfaces
Gas generator	Creates a primary flow. In the native layout, containers that supply communications and the place of the gas generator are allocated.
Bertin Elezers	The energy of the primary jet involves the surrounding air. Two releases show the position of the mixed flow relative to the pilot part.
Management bodies	The left linkage connects to the common valve stem. The right linkage connects two vanes that deflect in opposite directions. The cradle provides two axes of angular motion.
Pors	The front wheel, runners and balance sheets belong to the ground part. The cradle transmits the reaction of the ejectors to the body and participates in the control in the air.

Sources

F175 · Nadal Atlas and Personnel Passport

F60 · Protocol 50 pairings R9

F61 · R10 Systems Protocol

Archive cuts of estector and valve

Разрез эжектора и клапана

Эжектор · R7

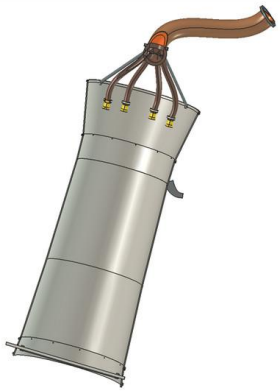

Клапан · R7

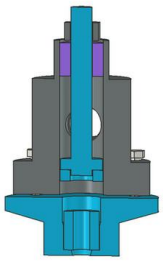

Ejector and valve from the confirmed album R7. The overall build in this chapter refers to R10.

On the sheet R7, the eject hull and the place of entry of the primary jet differ. A separate incision of the valve helps to correlate the movement of control traction and supply. Archival conjugation does not replace the current model R10.

Sources

F177 · Archive album of nodes Ludion R7

Ludion 002 · Airflow and Control

From the energy source to the response to the body

The intersection of the work process here is explanatory. In the primary jet, the gas has a higher speed, it involves additional external air. When the mixture is released, its impulse changes, so a reaction acts on the eject. The left handle changes the mode of both exits at once. The right changes the direction of the shields so as to get a torque at the rate. The cradle changes the direction of the common force against the pilot.





Two ejectors and a kinematic circuit of the valve, panels and cradle.



Explaining the scheme of functional connections. The sizes of the flow and geometry of the channels are determined by the primary materials.

Sources

F60 · Protocol 50 pairings R9

F61 · R10 Systems Protocol

F64 · Bilingual side showcase 002, Russian version

Ludion 002 · How It Works

CAD Close-ups and Functional Diagram

Air Involvement and traction control



Ludion 002 · Air Involvement and traction control. Atlas R10. The links are conditionally shown.

The primary stream fascinates the outside air. The output of the mixture gives a reaction on the ejector. The general team changes the mode of both exits, and the difference in the actions of the shields creates a ynpoque. The cradle changes the direction of the common strength.

The showcase visualizes the functional principle. The stored calculation of touch with the plane has separate criteria.

Sources

Passport of native personnel and audit

Two ejector

Pilot part

Ludion 002 · Showcase Screen

Reading System Behaviour and Telemetry

Elezers in the turn-based showcase

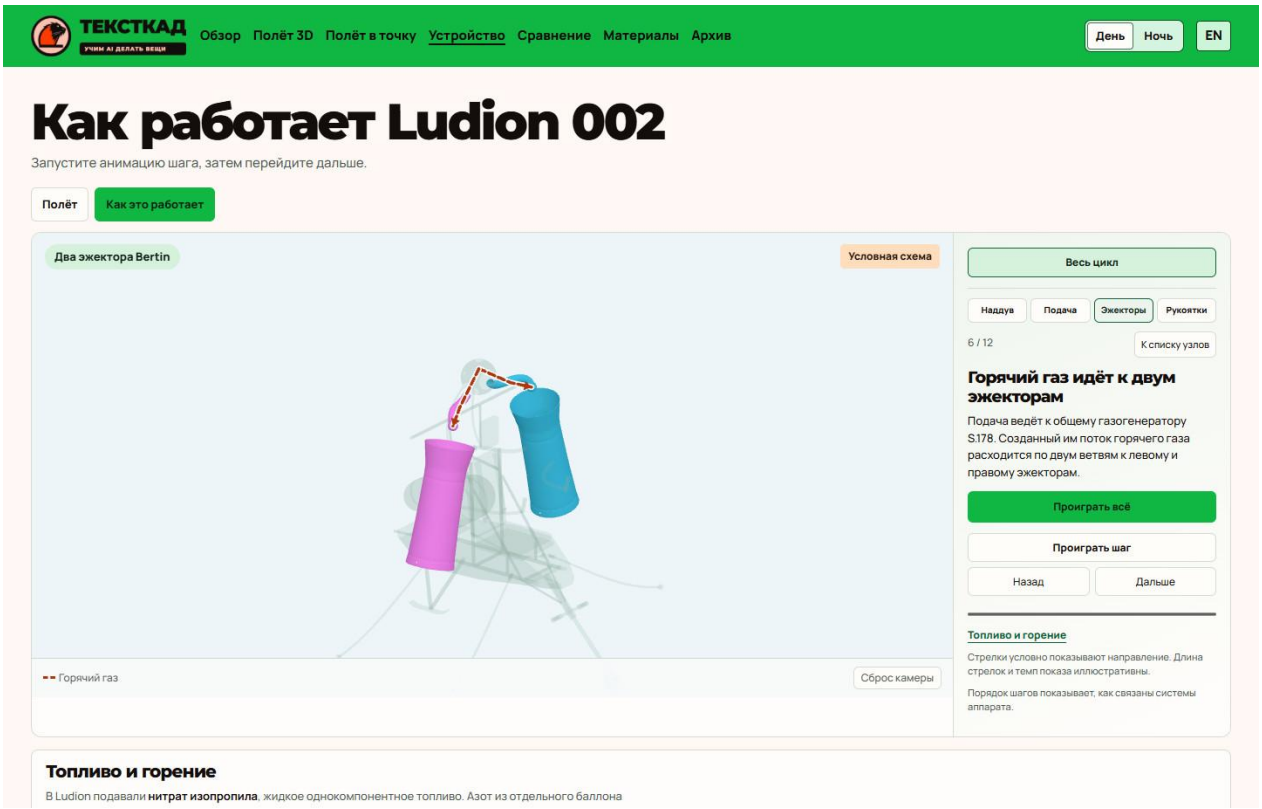

Ludion 002 · ejectors, step 6. Picture of the local showcase on November 25, 2026.

First, trace the dedicated primary branch, then the area of outdoor air engagement. Compare the explanation of the current step with both ejectors before opening the handles.

Indications relate to the selected step or digital script of the showcase.

Sources

Open the local showcase

Indicative screenshot

Ludion 002 · Forces and Motion

Longitudinal, vertical and angular motion



Functional drawing of directions. The length of the arrows is conditional. The physical status of each phase is refined in the text.

What is changing	How to read movement and strength
Height	The overall valve sets the mode of both ejectors. An vertical component of traction is important, especially when tilting.
Rising	The redirected effects of the shields can rotate the course with a relatively small resulting transfer.
Kren and Tank	Rotating in the cradle changes the direction of thrust. Its horizontal component translates the vehicle. Heading change alone does not determine the translation.

190 m for 32 s refer to the published departure of 002. The height of 4 m is indicated for another departure. Illustrative height in R13 profiles is given separately. The calculation considers 27 combinations of mass, phases and scenarios. To assess the real stock in a separate maneuver, synchronous consumption, height and traction are needed.

Sources

F61 · R10 Systems Protocol

F64 · Bilingual side showcase 002, Russian version

F131 · Ludion 002 R10. Native assembly of showcase

Ludion 002 · Landing Gear and Load Paths

Load, Payment and Repeatability of AI-CAD

Пилотская часть



Колесо, полоз и опоры



Pilot part with a frame and a separate type of ground supports R10.

Inspection section	Loading Path and Conditions
Accession	Reactions of the wheel and the runway are transmitted to the pilot carrier. One frame can not be set rigidity and permissible speed of impact.
Conjugs	In R9_P1, 50 selected pairs found intersections of more than 0.1 mm3 in both FCStd and in the reverted STEP. The origin and admissibility of each joint require dimensional data.
Communication with R10	In the functional map 412 tel. Named mechanisms simplify the repetition of poses and help tie the description of the patent to the model, not mixing individual results of exchange and flight dynamics.

Design in AI-CAD TextToCAD

Three separate geometric chains are needed. The first connects the handle with the valve, the second - with two panels, the third - a power plant with a two axial cradle. They should be simulated in the general coordinate system and associated with the patent, archival materials and individual assumptions.

In R10 412 bodies are associated with a functional card. R9_P1 compared 50 counterfeiting and STEP. AI-CAD TextToCAD helps to collect a read map of moving parts and repeat the verification of individual poses, retaining historical sources. For the review, this means that the work of the handles can be shown on the real details of the reconstruction, and the dynamics of the board leave sources tied to the boundaries.

Ludion 002 · Verification and Evidence

Large plans and terms of the next set-off

Пилотская часть R10



Два эжектора и рычажные связи



Close-up nodes from the native series. The angle and scale of each frame are selected for reading the details.

Verification	Result, area and required continuation
Historical trajectory	190 m and 32 s give the average track speed for one description. Another departure with a height of 4 m can not be combined with this record without confirmation by a source.
Kinematic interface	R7 inciners is useful for reading the internal route. R10 sets functional groups and mechanical connections. The connection of a particular internal node is checked for each passport.
Repeated exchange	50 intersections at the threshold of 0.1 mm3 are confirmed by repeated measurement in both forms of the file. To resolve the pairings, dimensional primary sources are needed.

The evidence-based transition to a particular flight requires an archival protocol, agreed height and flow, the centre of mass and dynamics of ejectors.

Sources

F60 · Protocol 50 pairings R9

F61 · R10 Systems Protocol

F64 · Bilingual side showcase 002, Russian version

F131 · Ludion 002 R10. Native assembly of showcase

Ludion 002 · Reading the Showcase

Viewing and sources

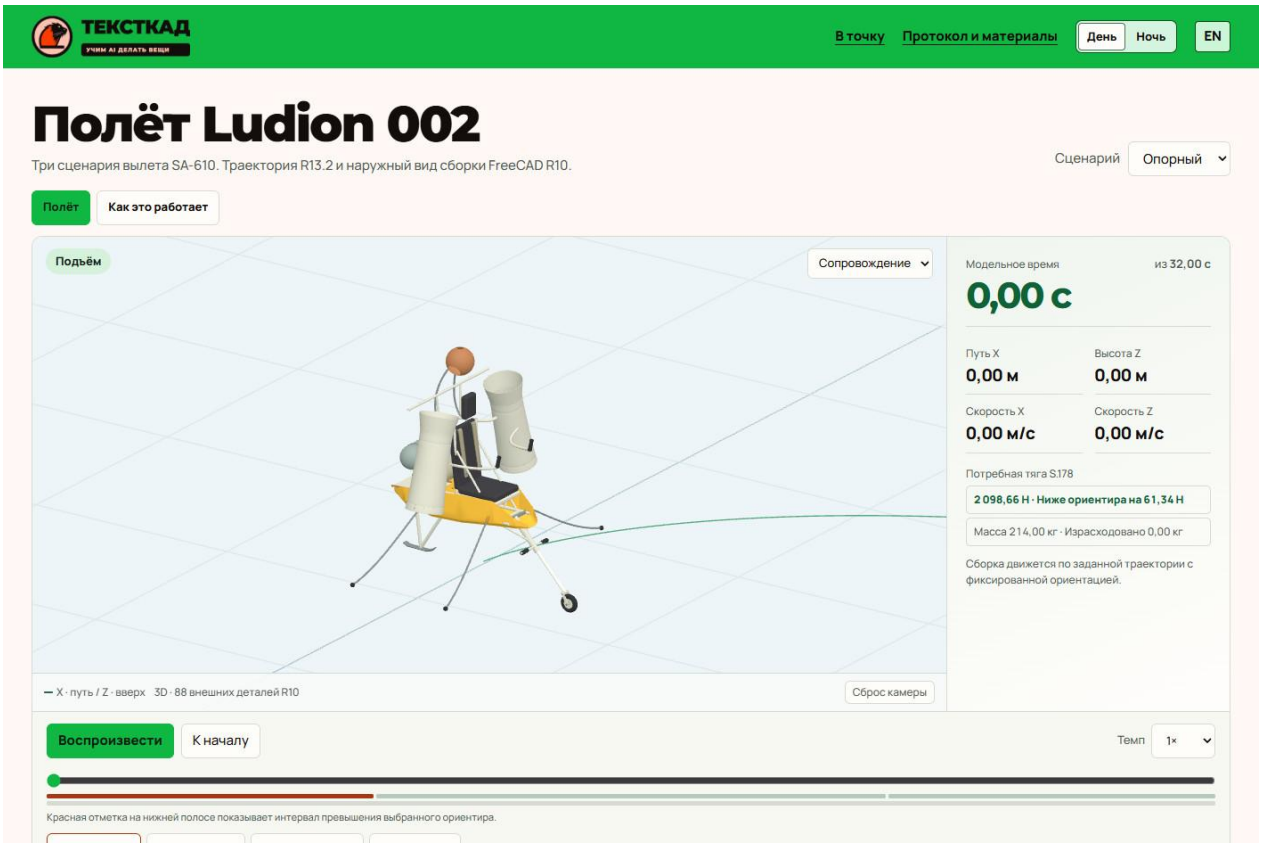

The starting screen of the project showcase "Ludion 002". An interface that opens by link from this section is shown.

Screen or document	What to watch and what to check with
Flight Showcase	Open the step-by-step explanation. In turn, find the primary stream, ejector, valve action, shields and crane tilt.
Handles and drives	Compare the still CAD and different positions of the executive parts. In the animation, check which part is moving and what component of the force changes.
Origin of numbers	Detachment of R10 protocol and R13 scripts. The SESPR 663.66/V and Sud-Aviation DEV/LU 2/69 EV/FR archives are required to bind a specific mode.

Sources

F64 · Open the design showcase

F176 · Full engineering atlas of products

F60 · Protocol 50 pairings R9

F61 · R10 Systems Protocol

F64 · Bilingual side showcase 002, Russian version

F131 · Ludion 002 R10. Native assembly of showcase

Results and conclusions

Constructive connections of the valve, panels and cradle are read in native assembly and according to the original descriptions. To restore the reaction of the board in one flight, a coordinated source and measurement data are needed.

Ludion 002 · Development History

Decision chronology and separately issued checks

How the project has changed

The base was accepted by the R8. Transfer to F: recorded 3 170 dilapidated files. Two external links were excluded from the copy. R9_P1 identified 50 open conjuns and independently clarified two small volumes in the imported STEP.

R10 linked 412 bodies to the functional map of systems. In R11-R13.2 there were animations and scenario comparisons. The user requested a distinction between the historical range and a given height, and later - the correction of the distorted proportions of 3D-view.

In the final version of the showcase there were bilingual explanations on the working cycle. The player saves the chosen step, and turn-based viewing and animation allow you to consider which areas are restored conditionally.

Sources

F60 · Protocol 50 pairings R9

F61 · R10 Systems Protocol

Sources

F61 · Ludion. Management mechanisms and protocol R10

F62 · Ludion. Detachable traction in all phases R13.1

Ludion 002 · Results and Limitations

R8 → R10 · R13 scenarios

50 pairs are tested in FCStd and STEP.

In all 50 selected pairs R9_P1 measured the intersection of more than 0.1 mm3 and in FCStd, and after the import of STEP. This was the geometric result. The purpose and size of these historical joints remain open.

Animation of 190 m in 32 s uses the published result of one departure. The height in the profiles is set separately, the number 4 m refers to another departure. It is impossible to combine these values into one measured trajectory.

R13.1 discusses 27 combinations of mass, phases, and scenarios. In one case, the calculated need almost coincided with the published maximum. The real margin depends on measurements at the same time and on the same board.

What Remains Open

The archive does not contain the original SEPR 663.66/V and Sud-Aviation DEV/LU 2/69 EV/FR. For a particular departure, synchronous flow, phases and high-altitude trajectory are not established.

The nearest decision

Link the original protocols and annexes to date and board 002. By size sources, choose priority pairings for reconcile CAD and STEP.

Verification of materials on November 24. The transfer remittance and the three primary protocols R9, R10 and R13.1 are read. The results of the calculations are compared with how they are presented in the chat.

Sources

F62 · R13.1 Thrust Test

F63 · Transfer res.

F64 · Bilingual side showcase 002, Russian version

Ludion 002 · Data and Method

R8 → R10 · R13 · Primary Materials

The Ludion 002 is tied to the dated free departure in Villaros on 20.12.1968, but the distribution of speed, flow and altitude by time remains unknown.

Historic Departure

According to Rothmund, the 002 device passed 190 m in 32 s. The average travel velocity of these two values is 21.375 km/h. Indicated the headwind 20 km/h.

An alternative source AAMS differently describes the wind and sequence. The conditional profile is not a restored telemetry.

Where to check – “4. Real tests and scenarios.”

Sources

F61 · PROTOCOL_R10.md

Intersections in STEP

For both STEP pairs, the sections yielded 55.679273 mm³, with an empirical estimate of ±0.0018 mm³. The differences from FCStd were −0.000255 and −0.000279 mm³.

The geometric intersection does not confirm the design and size of historical joints.

Where to check - "Clarification of the volume of JET7 / TIP7 in STEP".

Sources

F60 · PROTOCOL_P1.md

Ludion 002 · Evidence Review

R8 → R10 · R13 · Primary Materials

Comparison of affordable and required traction

At constant mass 215 kg, the peak of the upsurge is 2156.61 N in comparison with the published maximum installation 2160 N.

Available thrust is unknown for each flight phase. The arithmetical difference is an unverified margin.

Where to check - "Pirkings of the required traction", short scenario 215 kg.

Sources

F62 · REPORT_RU.md

Transfer reschedule and measurement limit

Directly after copying and before updating the paths, the protocol fixes SHA-256 for 3170 regular files. Two junction nodes are excluded.

This is the state at the time of transfer. Inspector R8 directly specifies engineering_status unapproved.

Where to verify — scope · regular_files_sha256_verified · sealed_r8_inspector.engineering_status.

Sources

F63 · Check_D_F_F_20261121.json

Condition of the next decision

Priority - the original test protocols and synchronous recordings by phases, and for pairing - the size sources of the board 002.

TURBOLET

TURBOLET · Museum Reconstruction R5 and Training Flight R1

THURBOLET is on a central vertical jet. Gas rudders near the release can redistribute its direction, and on the farm there are presented nodes. Landing reactions pass through four racks. The general sheet shows the reconstruction of the museum state, and the sizes of the movement are taken from a separate training production.

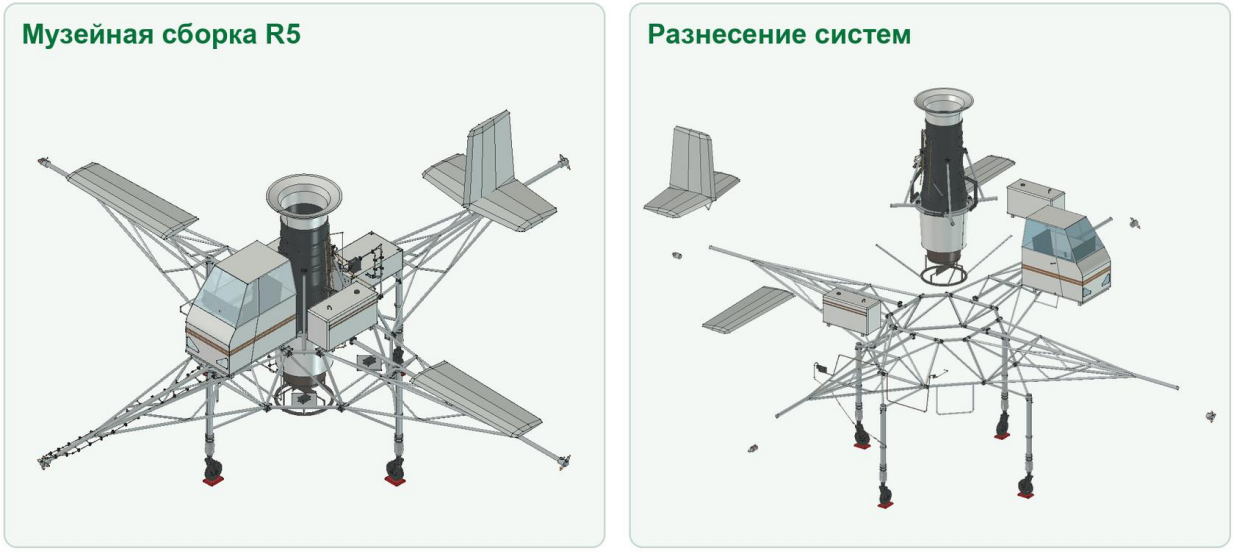

TURBOLET. General view and open or broken assembly from the native atlas R5 · museum configuration.

Sources

F179 · Full engineering atlas of products

F178 · Passport of native atlas and personnel

Showcase and fresh release check

The main appeared a 36-second review with the choice of language and the preservation of the position. Chapters lead to engine cut, manual flight, compared to the Roadster and the archive. The demonstration mode and open parameters save the DEMO and OPEN tags.

Sources

Showcase of November 25

Open the point task mode

TURBOLET R5 · video review RU/EN

Method or record for updating

Native FeedBack from November 24

TURBOLET · Technical and Economic Parameters

R5 Museum Assembly / Flight R1

The historic flight and the Flight R1 model have different conditions. The cost of the first copy and the price of the attempt relate to the DEMO program with the accepted composition and number of attempts.

Parameter	Value	Evidence
Length × width × height R5	10,000 × 10,000 × 3,821 m	CAD
Mass of the empty apparatus	—	OPEN
Accepted mass of empty equipment	2 050 kg	DEMO
Duration of free departure	≈ 6 min	Historical
Air time, nominal R1	47,57 s	DEMO
The scale of the DEMO program	3 machines · 2 years · 60 attempts · 8 s of air phase to attempt	DEMO
Russia · The first copy with development	49 342 433,99 RUB	DEMO
Russia · The price of one attempt	1 855 876,86 RUB	DEMO

Sources

Full passport in the catalog · 60 lines

Project showcase passport

Current showcase release

TURBOLET · CAD Views and Datums

Orthogonal photography and comparable physical scale

Спереди



Слева



Front and left projections of CAD. On the sheet is designed one physical scale.

The orthograph range shows the position of the four supports relative to the farm. The lower appearance is useful for binding W2 and the exhaust zone. The sizes restored by the museum frames, it is better to check with the dated group of angles.

Сверху

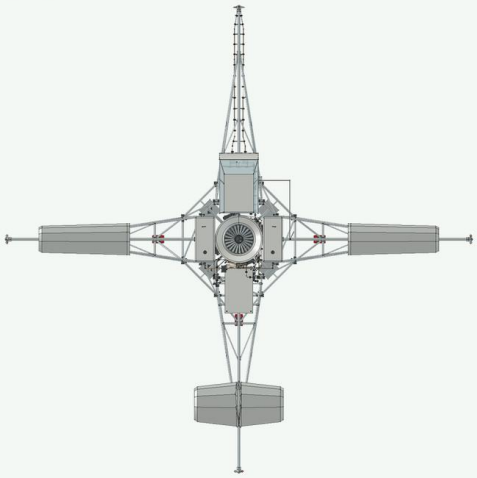

Снизу

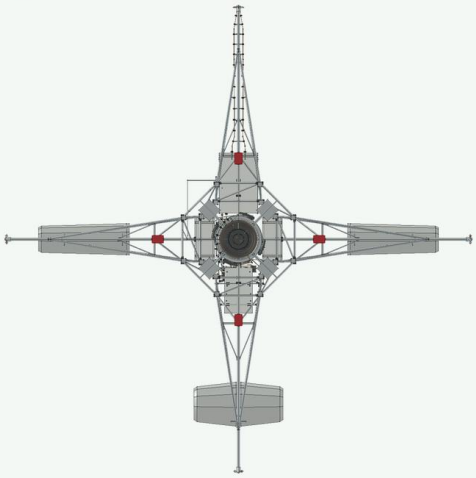

Upper and lower projections of the same stored revision. One physical scale is sustained.

Sources

F178 · Passport of native atlas and personnel

F179 · Full engineering atlas of products

TURBOLET · Layout and Assemblies

R5 · Museum Configuration

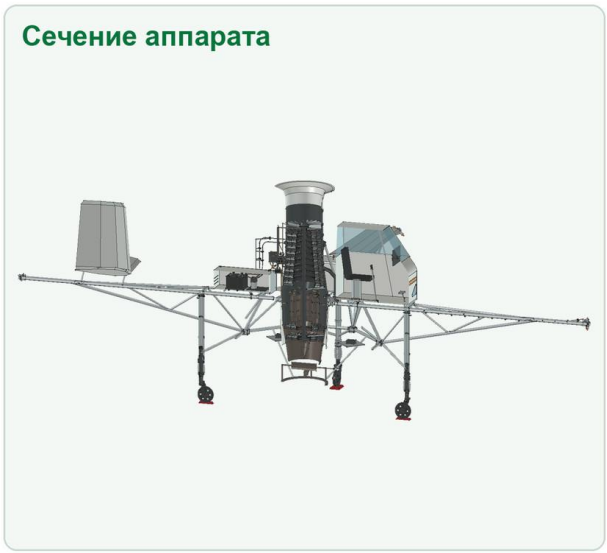

TURBOLET R5. Longitudinal color incision RD-9BP. The colors are conditional and show the purpose of nodes in the museum CAD model R5.

Blue - entrance, blue - compressor, orange - combustion chamber, red - turbine, purple - release, yellow - val.

On the incision from top to bottom can be seen the course of the flow: entrance → compressor → combustion chamber → turbine → release. The turbine transmits the rotation of the compressor through the shaft. Gas rudders below the release deflect the stream.

Knot	Purpose and interfaces
The Reference Farm	The vertical engine and the cabin are installed in the spatial structure. The inslice shows the location of the main groups relative to the axis.
Protide part	From the entrance to the top, the flow passes the compressor and hot zones, gives part of the energy of the turbine communication and goes down. The engine cut explains the order of the reconstruction sites.
Gas rudders and end node	The central release shows the steering elements. On a separate sheet is a set valve and nozzle. Historical expenditures and performances remain open.
Museum supports	The support of W2 is specified in an additional dated angle. Linings and visible shell casings are signed as part of the state of the exhibit.

Sources

F178 · Passport of native atlas and personnel

F66 · Museum passport R5

F68 · Protocol of the first opening P05

Sources

Native RD-9BP incision of R5

Color cut passport

TURBOLET · Airflow and Control

From the energy source to the response to the body

The central engine creates the main flow. The steering wheel affects the stream at the outlet and change the resulting one. The horizontal part helps to carry the device, and the force applied past the center of the masses changes the orientation. In the R5 Flight training, side and courseing effects are represented by equivalent forces and a couple. Project geometry shows where the nodes are, their equivalent action is read by training.

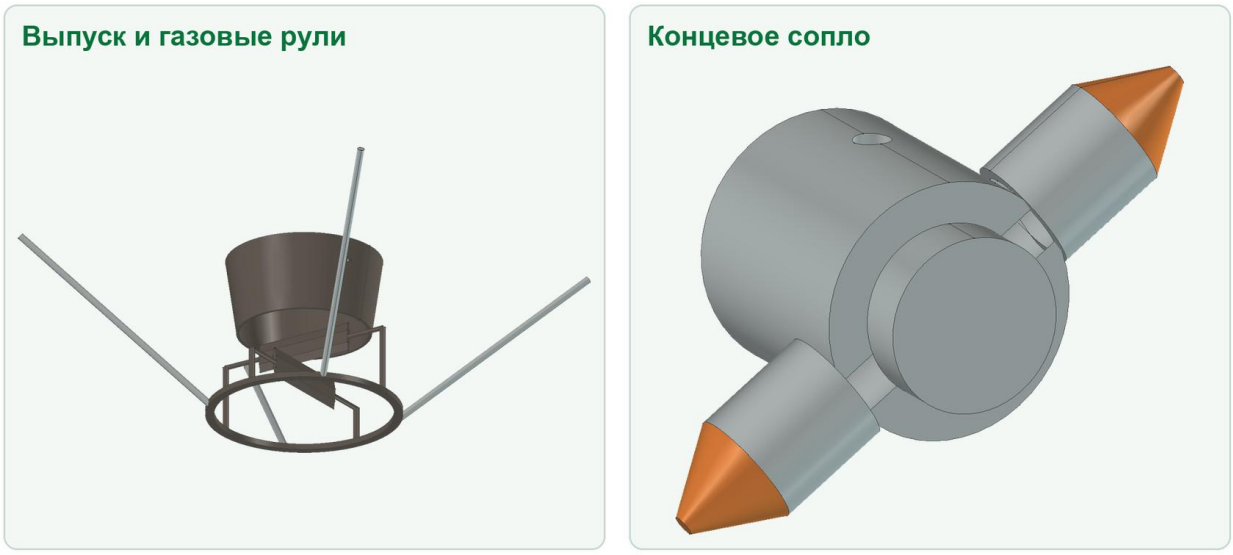

Central output with gas steering wheels and a separate end nozzle.



Explaining the scheme of functional connections. The sizes of the flow and geometry of the channels are determined by the primary materials.

Sources

F66 · Museum passport R5

F68 · Protocol of the first opening P05

F71 · Final artisanal record of museum assembly

TURBOLET · How It Works

CAD Close-ups and Functional Diagram

Main stream and gas rudders



TURBOLET · Main stream and gas steering wheels. Atlas R5 · museum configuration. The links are conditionally shown.

The turbine transmits energy to the compressor through the shaft. The steering wheels in the stream change its direction. The horizontal component of the reaction moves the device, and the displaced power line gives a moment.

The RD-9BP coloring is conditional. In R5 Flight mode, the teams are represented by equivalent forces and moments.

Sources

Passport of native personnel and audit

RD-9BP · Color incision

Release and gas rudders

TURBOLET · Showcase Screen

Reading System Behaviour and Telemetry

Gas rudders and manual mode

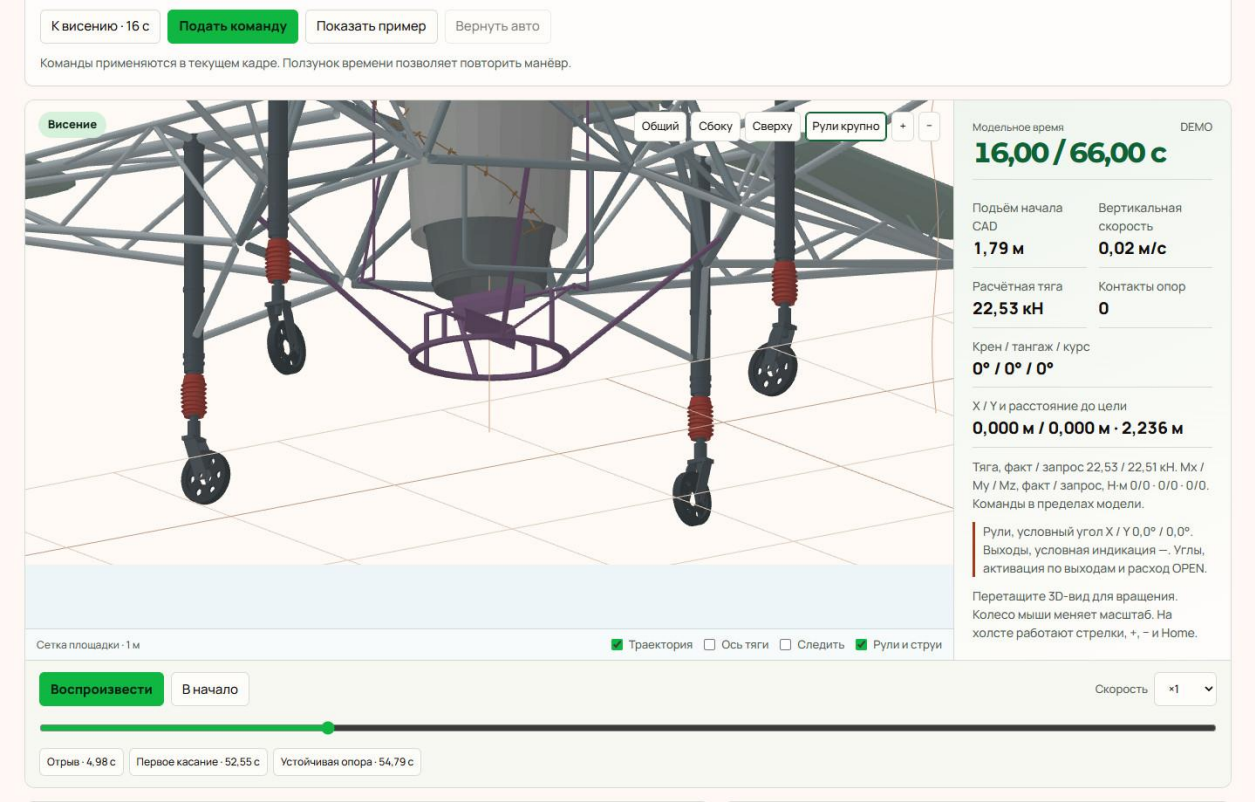

TURBOLET R5 Flight · manual mode, 16,00 s. Picture of the local showcase on November 25, 2026.

In the hung frame, first find the model time and designation of the state. The type of "Rusty large" shows the place of the application of the control influence. Teams of roll, tanga and yaw are read separately from the change in overall cravings.

Indications relate to the selected step or digital script of the showcase.

Sources

Open the local showcase

Indicative screenshot

TURBOLET · Forces and Motion

Longitudinal, vertical and angular motion



Functional drawing of directions. The length of the arrows is conditional. The physical status of each phase is refined in the text.

What is changing	How to read movement and strength
Vertical	For 2 300 kg in the curriculum, the weight is about 22.56 kN. To accelerate up after a breakay, the vertical component must exceed the weight.
Transfer	The change in the direction of the main force gives a lateral component. In the balance, the main flow is taken into account once.
Course	For educational yawing, an equivalent pair is given. The available power on historical nozzles depends on an unknown feeding map.

In R5 Flight R1 a 4.98 s, touching 52.55 s, unsupported 47.57 s. Maximum lift of the center of the masses is 1,808 m. The displacement of the landing point of 2.24 m and the path in plan 3.13 m describe different values. It's a conditional profile. The R5 passport answers another question – what can be seen in the museum exhibit.

Sources

F68 · Protocol of the first opening P05

F71 · Final artisanal record of museum assembly

F133 · TURBOLET. Conditional forces and moments R5 Flight

TURBOLET · Landing Gear and Load Paths

Load, Payment and Repeatability of AI-CAD

Ферма с опорами

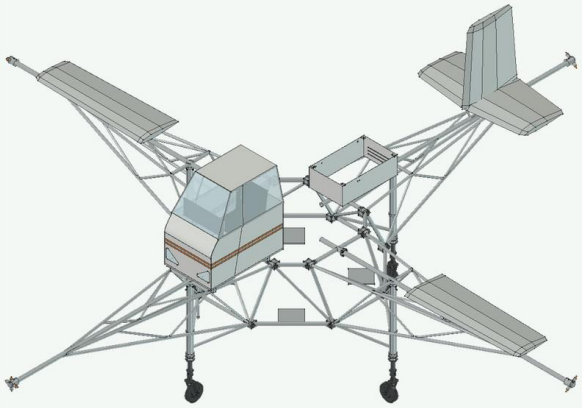

Узел W2



Carrying farm and mounting large-plan of support W2 in the museum R5.

Inspection section	Loading Path and Conditions
Reaction of the wheel	The wheel, the rotary node and the rack transmit the reaction to the farm. On the sheet W2 you can see the layout of the sleeve and the plating.
Model contact	The R5 Flight uses nominal hardpoints. The rigidity, damping and load of the historical rack are not defined from this production.
Reproducibility	A copy of the museum R5 is open in TextToCADWorkbence with 2 357 objects. The first picture before the camera is configured confirms the visibility of this saved file.

Design in AI-CAD TextToCAD

Museum and flight configurations should be recorded separately. Visible supports and fasteners can be restored by dated images, and cravings, inertia, executive efforts and chassis for calculation can be specified from their sources. The camera and visibility of the first check becomes part of the controlling stake.

In the re-examination of TextoCAD-FreeCAD-FreeCAD, a byte copy of the R5 opened with 2 357 objects. The first frame was obtained before any camera change; the original SHA coincided with the passport. AI-CAD TextToCAD gives a reproducible way to show what kind of museum geometry really opens and is visible. The date and conditions of the training flight can be stored with a separate artifact without mixing with a historical model.

TURBOLET · Verification and Evidence

Large plans and terms of the next set-off

Баки музейной сборки

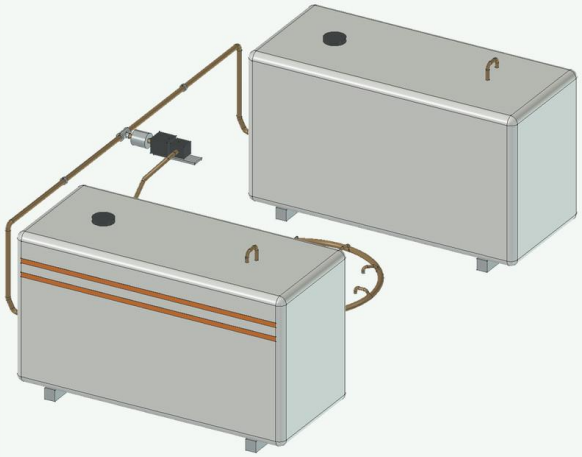

Оконечный управляющий узел

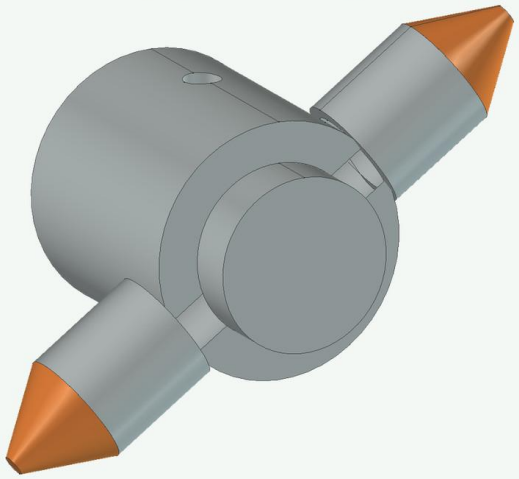

Close-up nodes from the native series. The angle and scale of each frame are selected for reading the details.

Verification	Result, area and required continuation
Shooting a museum copy	In the Verifiable TextToCADWorkbench, the original R5 is open with 2 357 objects. The first frame is taken before the camera is set.
Motion Datums	As a reflection of the center of the mass center 1,808 m, the transfer of 2.24 m and the path along the horizontal projection of 3.13 m denote different measured quantities.
Ground model	The calculation uses nominal hard points. Museum supports W2 s lining are tied to the exposition. For the historical rigidity of our own data is not enough.

The museum and dynamic branches require separate checks. For the first, the date and measurement are important, for the second - the mode of the engine, the flow rate and the physics of contact.

Sources

F66 · Museum passport R5

F68 · Protocol of the first opening P05

F71 · Final artisanal record of museum assembly

F133 · TURBOLET. Conditional forces and moments R5 Flight

TURBOLET · Reading the Showcase

Viewing and sources

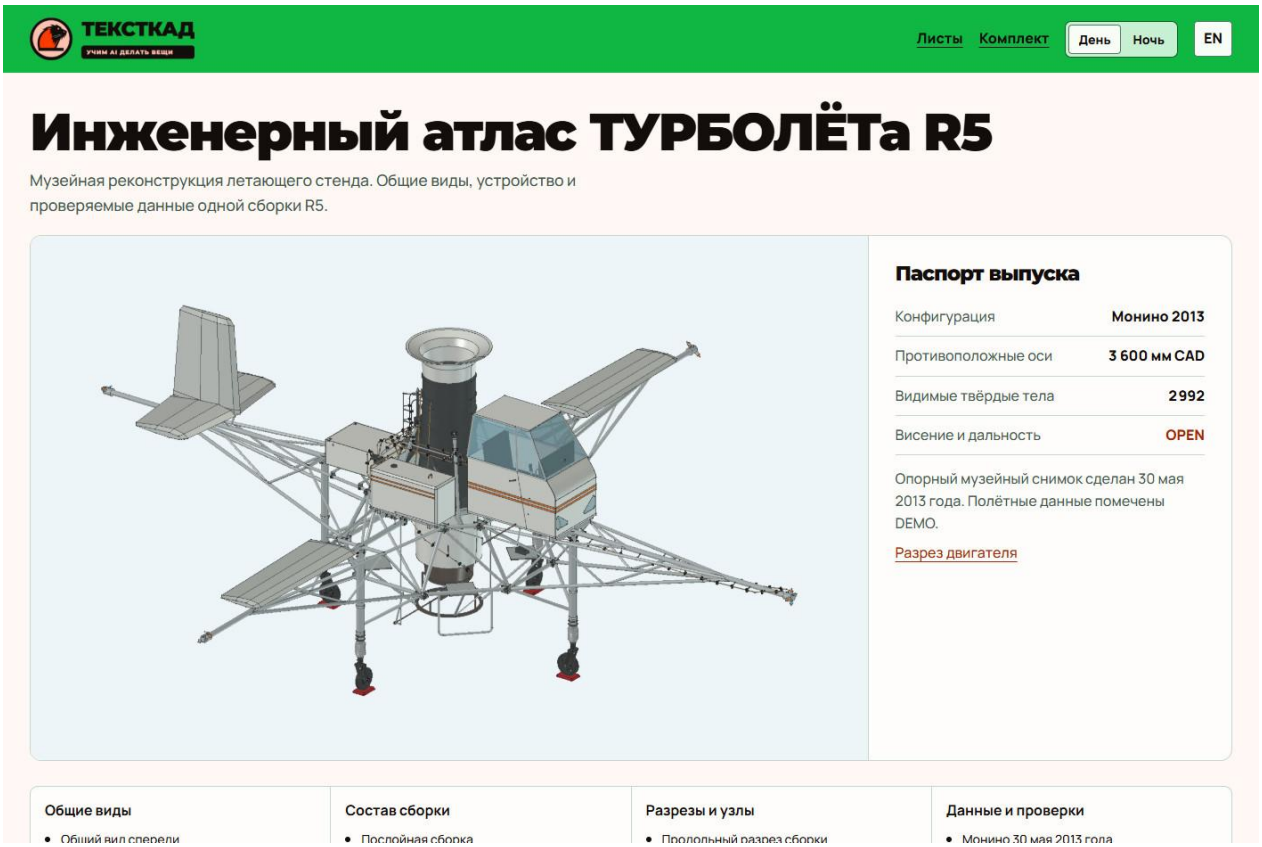

The starting screen of the design showcase "TURBOLET". An interface that opens by link from this section is shown.

Screen or document	What to watch and what to check with
Atlas R5	Start with the museum assembly, then compare the section of the device and the engine cut. Go to the gas steering wheels, nosplumes and a large W2 plan.
Passport of exhibit	Check the pictures by date and visible rappers. Wiring P05 and added support confirm the external composition within the selected angles.
Current flight cycle	For Flight R1, separately read the initial mass, the definition of contact and the composition of equivalent forces. There is no flight protocol with a measured expenditure for a historical assessment yet.

Sources

F71 · Open the design showcase

F179 · Full engineering atlas of products

F66 · Museum passport R5

F68 · Protocol of the first opening P05

F71 · Final artisanal record of museum assembly

F133 · TURBOLET. Conditional forces and moments R5 Flight

Results and conclusions

The museum R5 gives a reproduced geometry and visible nodes. The training position explains the controllability and transition to supports at the specified entrances. For historical dynamics, separate sources of traction, consumption and contact are needed.

TURBOLET · Development History

Decision chronology and separately issued checks

How the project has changed

The minimum R4 package was transferred to F:. Its receipt covers 254 files. The museum record is anchored to 30 May 2013 and five groups of visible reference points. Parameters that cannot be scaled from the photographs remain open.

First, the elements of three visible supports were added. An additional frame from May 31 gave grounds to clarify the fourth, W2. By P05 complemented the visible parts of the wiring. The internal scheme and spinning require documentation.

A separate training animation of R5 Flight R1 and an atlas for 18 sheets were created. The search for materials about the real flow reached the archives, but the previously ordered letters were removed from the shipment. In the magazine, they are drafts.

Sources

F66 · Museum passport R5

F67 · Native model R5

Sources

F71 · TURBOLET. Museum geometry and power elements in the atlas

F133 · TURBOLET. Strengths, Moments and Contact R5 Flight

TURBOLET · Results and Limitations

Monino · R5 / Flight R1

The first discovery of the R5 is repeated in FreeCAD.

For the 2,300 kg model, the training record shows liftoff at 4.98 s, first touchdown at 52.55 s and 47.57 s airborne. The landing point moved by 2.24 m, and the horizontal path length was 3.13 m. These values describe one specified scenario.

With the new opening of the byte copy of R5 in TextToCADBBBunch, 2 357 objects were received. The number coincided with the previous P05 protocol. The first frame before the camera changes contains a model. The checksum of the source coincided with the passport and with a copy after checking.

What Remains Open

Scalable sizes, completeness of the exhibit and the characteristics of the test configuration require individual sources. For the historical duration of hanging and range, there is not enough measured flow rate in the appropriate mode.

The nearest decision

Compare museum measurements and additional angles with an R5 passport. For dynamics, a form or protocol with an identifiable mode and date is needed.

Verification of materials on November 24. The new check is made on a separate copy in FreeCAD 1.1.4 via the TextToCAD 1.2.0 bridge. The composition, visibility, versions and parameters of the first picture are given in the section "Control opening in FreeCAD".

Sources

F68 · Protocol of the first opening P05

F69 · Training dynamics R5

F70 · Transfer remittance

F71 · Final artisanal record of museum assembly

F72 · Archives Journal

TURBOLET · Data and Method

Monino · R5 / Flight R1 · Primary Materials

R5 reproduces the museum exposition Monino on 30.05.2013; the model of the museum object should not be considered a reliable scheme of historical test flight.

Background photo

The Clemens Vasters photograph dated 30.05.2013 is 5184×3456 pixels and has local SHA-256 c314036918668339ab1a0e0d800d2030d32a041d93caaffdf13fb5adfd14d2fa. The reference record identifies it as an exhibition photograph.

The neighboring exhibit covers part of the knots. The image does not establish hidden geometry.

Where to check - "Personal frame".

Sources

F66 · PASSPORT_MUSEUM_CONFIGURATION.md

Pors W2 in two days

The clight is traced on footage on May 30 and 31. The folded case is visible in the image Diskzero on May 31, while on the support frame it is closed.

The transfer of the cloak to the state of the previous day is based on the neighboring date. Dimensions and Material OPEN.

Where to check - the "Primary source" table.

Sources

F106 · W2_ARCKINGS_MONINNO_2013.md

TURBOLET · Evidence Review

Monino · R5 / Flight R1 · Primary Materials

Plane and tail

Two May angles confirm the presence of side planes and are consistent with R4. The desired keel of the next day and pictures of the tail of 2020 are marked as an analogue.

The keel and stabilizer, their sizes and angles on 30.05.2013 remain OPEN.

Where to check - Table P05 and the paragraph on the approval of R4.

Sources

F107 · P05_PERSONY_PERSONY_2013.md

First opening of P05

The protocol records FreeCAD 1.1.4, PID 37000, TextToCADWorkbbench and frame to the commands of the view. SHA file before and after the same.

This is evidence of a specific preserved GUI-session, rather than a new test of historical accuracy.

Where to verify — pid · freecad_version · sha256 · sha256_after · first_capture_before_view_commands · workbench.

Sources

F68 · result.json

Condition of the next decision

To close geometry, independent scalable angles or measurements of the museum exhibit and documents linking the visible configuration to a specific date are needed.

Comparable Results

Links between chats

From LLTV to other projects, the method of taking into account events, expenses and cost has moved. When transferring, it is important to redefine the device, mode and source of each number.

Communication	What is used	Condition of Comparability
LLTV → C.400 P.2, SG1262, XJ314, Ludion, TURBOLET	Breakdown and touch as the boundaries of the flight interval, the separation of sources and models, the structure of the display.	Save your own inputs, video scale, time scale and geometric reper.
Rocket → ARGON, IMPULSE, VEKTOR	Compare objectives, a list of maneuvers and discussion of “+20%”.	For “faster” to agree whether time or reverse is compared. Assign the standard performance and error.
C.400 P.2 → Roadster rating	RR-H1 checks the short R5/C6I scenario.	Ting the result to five RR-H1 profiles. The main DEV45 series retains its own set-off.
ARGON → IMPULSE	General parametric skeleton and separate native branches.	Check the rappers, dependencies and conflicts on the actual files of each car.

For energy to fix the registration boundary. The energy of the auxiliary tyre, the energy of gas preparation and all the energy of the mission are independent values. For a range to distinguish the path along the trajectory, the displacement and position of the stop point.

Sources

F34 · LLTV and Roadster Comparison Methods

F43 · Late laboratory ERR-H1 s with five profiles

F18 · DEV45: audit of 43 sources and boundaries of conclusions

F25 · Matrix of 42 expert replies

Cost per Attempt and Programme Cost

Derivative calculations

In LLTV, the most noticeable factor in the cost of one attempt is the number of attempts to distribute the development, manufacture and maintenance of the park.

The U.S. Estimated Scenario	LLTV	Competing Roadster
3 cars, 5 years, 100 attempts on the car	128 060 USD per attempt	169 986 USD per attempt
The same park, 500 attempts on the car	32 433 USD per attempt	37 641 USD per attempt
Variable part of the basic attempt	8 526 USD	4 555 USD

These are the values of the historical calculator of November 2026. In the baseline scenario, the variable part of the Roadster is lower, and the full cost of the attempt is higher. When transferring to the cost of a successful departure, you need an actual percentage of successful attempts.

In the same chat, two plants were separately evaluated and a catalog of equipment was formed. The volume of production, loading and procurement conditions apply to pre-project assumptions. The DEMO script of the TURBLETA chat used a different scale - 3 cars, 2 years and 60 attempts for the whole park. Comparison of the total amounts requires first to bring the volume to one base.

IMPULSE has 51.0 million ₽ refers to the proposed queue V1 before the next decision. To compare it with the price of one car or with the price of a successful flight there is no reason.

Sources

F35 · calculator of the cost of the attempt LLTV and Roadster

F06 · Variable TK R06 in Russian

Verification by Reopening in FreeCAD

Verification 24 November 2026

A picture of the museum R5 opened in a separate FreeCAD process. Before the change of the camera and visibility, an unempty frame was obtained, and the number of objects coincided with the saved protocol P05.

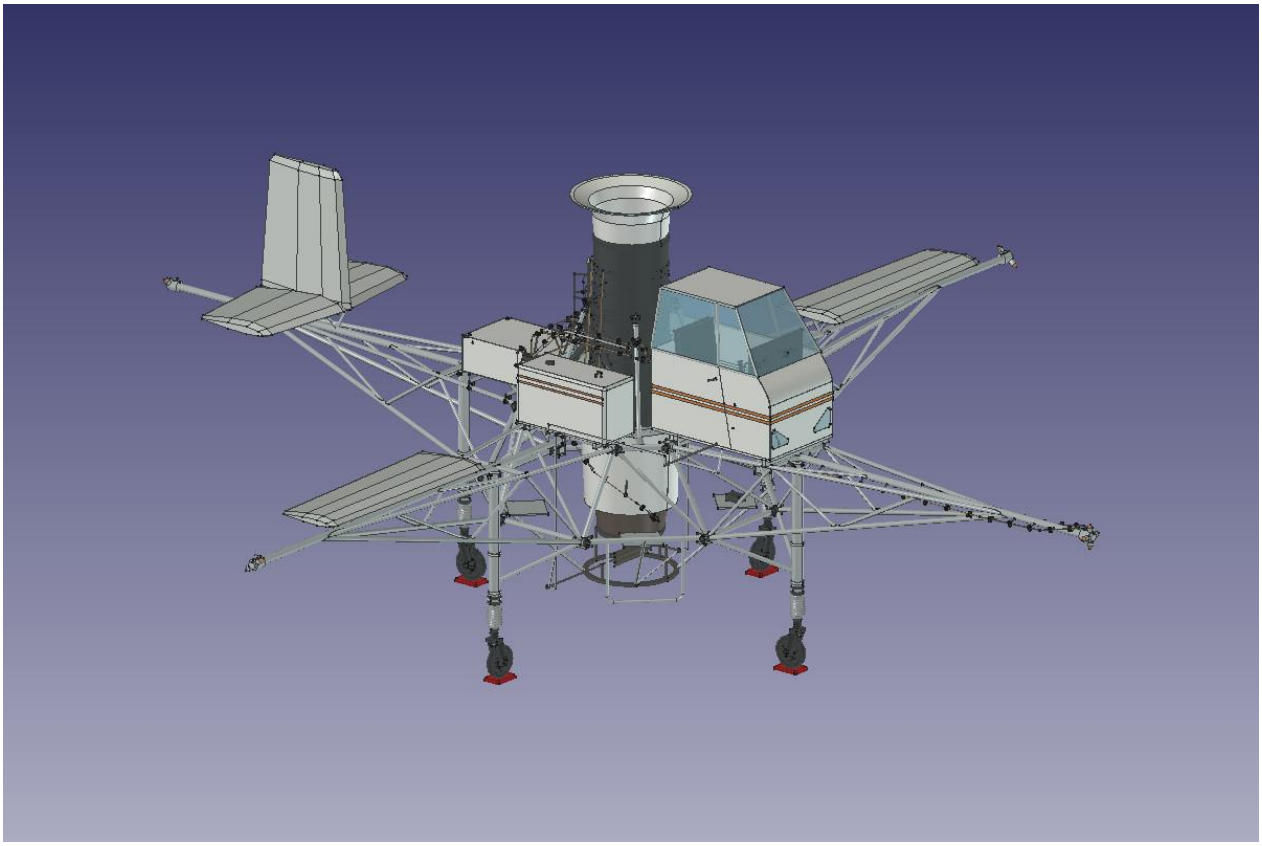

The first frame of the control opening of the copy of the R5. The original PNG is included in the “Fundamentals” folder.

FreeCAD 1.1.4, PID 24964, TextToCADWorkbench, bridge 1.2.0, Python 3.11.14. The main endpoint pointed to the completed process. A separate profile and a CLI of the same bridge are used for the verification with a PID binding.

A total of 2 357 objects, including 2 276 Part::Feature, 79 groups and 2 tables. Current visibility counter – 2 272 Part::Feature. In the old protocol, the same number is obtained with an additional condition for the presence of a solid. To verify geometric equivalence, form data are needed.

SHA-256 of the source and copies coincided before and after verification. Runtime_provenance has the path of the installed module in C:, Python and the python-code-code-fields-vv2 algorithm. The installation check separately revealed changed_sources and installed_mismatch relative to the previous delivery.

Control confirms the opening, composition and preserved visibility of one R5. The loading and kinematics did not include this launch. The separate launch of the C6I for the frame of Tesla confirms the display of the selected groups. His protocol is included in the source directory.

Sources

F74 · Control opening protocol R5

F75 · Starting frame before the camera change

Decision Sequence

Engineering Conclusion

1. Fix the object and the rule of offset

For IMPULSE and VECTOR, choose what is considered the first delivery. For Roadster and ARGON, fix the height rapper, the Rocket version, the “+20%” rule and the end of the attempt. The result is a record by which two independent readers will receive the same standings.

2. Describe a certificate that can change the solution

For IMPULSE, this is a confirmation of the power interface of the rear suspension. For VECTOR - general initial flight and landing data and a positive gap during load. For Roadster - the results of three measurement areas. For ARGON - compatibility of mass and useful stock in the selected configuration without loss of maintenance.

3. Retain the boundaries of historical reconstructions

For LLTV and C.400, the main thing is the verification of the inputs with the data of the selected device. For SG1262 - elimination or executed decision to exceed STEP admission. For XJ314, the path of effort from fork to frame. For Ludion and TURBLEET - a primary document or measurement of a particular board and date.

4. Update the related set with one audit

When geometry changes, re-establish the applicability of the calculation, images and indicators. For ARGON, this is especially true of the general skeleton, frame, cocoon, GasR2 and driver’s seat. For each car project with an optional TK, save separate passports of the proposed performances.

The order is proposed in this review. The timing and criteria of the initial TK remain the proposals of the relevant committees, if the materials do not include their acceptance.

Comparing Measurements

Methods of reading

Value	What to record	Example of Errors in These Projects
Height	Rapper, zero countdown, absolute value and increase.	In DEV44, absolute 1.636 m and an increase of 1.165 m were obtained at a time. Substituting one number instead of another changes the conclusion.
Duration	Boundaries of recording, separation, touch and resistant peace.	In LLTV, the total scale occupies 43 s, without support - 31,741 s. For Roadster, the shutter speed test continues after the first touchdown.
Range	Horizontal length of the path, displacement or way to stop.	In the training R5 TURBLETE displacement 2.24 m, and the projection of the path with corrections is 3.13 m.
Gas Reserve	What volume is measured, what part of the stock is available in the adopted mode, how much the equipped car weighs.	In Argon, external entangles and in the IMPULSer, the calculated stock supply has different physical meanings.
Composition of CAD	The level of the account and the visibility filter - a document, group, object, body or body after export.	TURBLET has 2 357 objects of the document. The SG1262 8 626 bodies refers to a specific STEP of visible assembly.
Status	Separately note the formal validity, getting into the tolerance and acceptance of the claimed product.	SG1262 has all exported bodies valid, but one did not pass the local tolerance along the edge.

OPEN denotes an open question in the source material. HOLD means that further acceptance in the specified area is suspended. In all cases, you need to read the area of status in the protocol itself.

NASA and French C.400 Sources

Historical Identification

NASA's history distinguishes the research LLRV and its LLTV training successor. This is the reason to check which side and stage of the program includes an archival description. R4D.1 figures are derived from reconstruction files.

Sources

NASA. From LLRV to LLTV

The contractor's report is considering the transition from LLRV to training LLTV. This is a source of configuration change, requiring to trace the origin of each transferred property.

Sources

J. Ryken, Bell. NASA CR-71253, 26.01.1966

The technical note examines the LLRV research management system. Assigning these measurements to the other board of LLTV requires a separate justification.

Sources

C. R. Jarvis, NASA. TN D-3903, 01.04.1967

The museum card identifies the experimental P-2. To check the designation and appearance, it can be read next to the R6E5 atlas.

Sources

Musée de l'Air et de l'Espace. C 400 P-2

Table P2 shows the chassis diagonal of 5.25 m and approximate autonomy of 7-8 minutes. The first meaning explains the choice of execution of the atlas. Proximity to 6 min 55 s in P1 does not independently check the flow model.

Sources

AAMS. Auguste Morel, section about C-400 P2, p. 21

Museum Records and Photographs

Historical Identification

The source photo card contains the date of the shooting, the author and resolution 4 835 × 2 501. Visible external outlines can be compared with the museum sheet of H62. There is no hidden internal structure with a frame.

Sources

Clemens Vasters. Schwebegestell, 5 December 2017

The catalog connects the XJ 314 s by the manufacturer of Rolls-Royce, Hachknell and 1954. It contains a stand and separately its parts. The estimated supply of the G1 plug refers to the project version and is checked by its protocol.

Sources

The Science Museum Group. Inventory number 1961-10

The museum card refers to Ludion as experimental devices. To restore the profile of a separate departure, documents with a date, side and measurements are required.

Sources

Musée de l’Air et de l’Espace. Sud Aviation Ludion

For the TURBELET, the support is a saved photo of Monino dated May 30, 2013. Its SHA-256 coincides with the R5. passport. Details blocked by the neighboring exhibit, the authors checked on other angles and celebrated the date of each test.

Sources

F109 · Clemens Vasters, museum in Monino, photo 30.05.2013

Coverage and Source Register

Method and Navigation

The sequential pages of the history of the ten named chats are read until the earliest available move. User clarifications and later corrections are taken into account. The number of moves includes intermediate and interrupted appeals. Dates are shown in Moscow.

Chat in Codex	Dates of November	Moves
Analyze the IMPULSE project	19–24	24
Analyze the VEKTOR project	19–23	27
Evaluate the readiness of the Tesla Roadster Rocket	19–23	58
Analyze the project D:\ARGON working folder F:\ARGON	19–23	30
Analyze the LLTV project	19–23	29
Analyze the C.400 P.2 project	21–23	24
Explore SG1262	21–23	18
Analyse the XJ314 project	21–23	17
Analyze the Ludion project	21–23	25
Analyze the TURBOLET project	21–23	20

Separately read 8 moves "Development of the style of TextoCAD 2.0" for November 22-23. The registry contains 109 files with full tracks, sizes and recalculated SHA-256. Links in sections lead to the initial releases on this computer.

In the report, historical information goes back to the materials of project chats. The new file reconciliation confirms the identity of the selected file. The composition and first opening are re-tested at the museum R5. On a separate copy of the C6I received a presentation of Tesla with a translucent body. Physical testing and independent examination of all the initial archival evidence were not included in this review.

Sources

Annotated Directory. Search by project, file or result

Full paths, size and SHA-256 of each file

F76 · Printed Account and Screen Themes TextToCAD 2.0

Sources

Axonometry protocol. Native models, camera, size and SHA-256 images

Sources

Protocol of Detail. List of species, CAD sources and materials ARGON

Sources

traction and control circuit protocol

Sources

Flight and landing. Register of charts, sources and native personnel

Sources

Protocol of Forces, Calculated Guidelines and AI-CAD