TEXTTOCAD
TEACHING AI TO MAKE THINGS

R11B · R06 · AWD / RWD

IMPULSE

Engineering atlas of packaging and verification

24 sheets. Paired native views, sections and calculation evidence.
TextToCAD local edition, 23 November 2026.

PDF

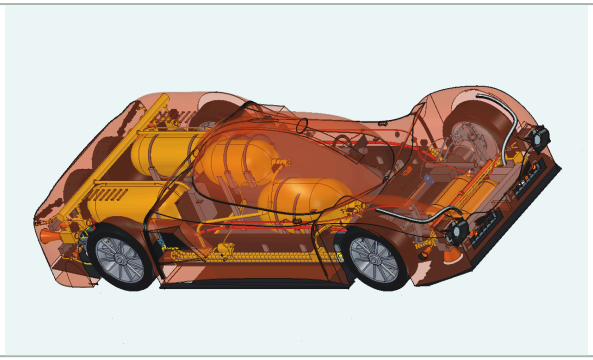

AWD · R06

Atlas sheets

01 Front three-quarter view	02 Rear three-quarter view	03 Body profile
04 Top view	05 Underbody and airflow hardware	06 Exterior panels
07 Structural members	08 Drivetrain differences	09 Front suspension and steering
10 Rear suspension	11 Battery and cooling	12 Cockpit and bulkhead
13 Fans and ducts	14 Nozzles and control circuit	15 Landing reserve in context
16 Vessels, collector and blanks	17 Longitudinal cut at Y=0	18 Transverse cut at X=1550
19 Horizontal cut at Z=343	20 T201 and T202 routes	21 Suspension travel and steering
22 Landing package sections	23 Conditional AWD and RWD manoeuvre	24 Inventory and flow limits

01 / 24 · R06

Front three-quarter view

Orange shell and packaging in both assemblies.

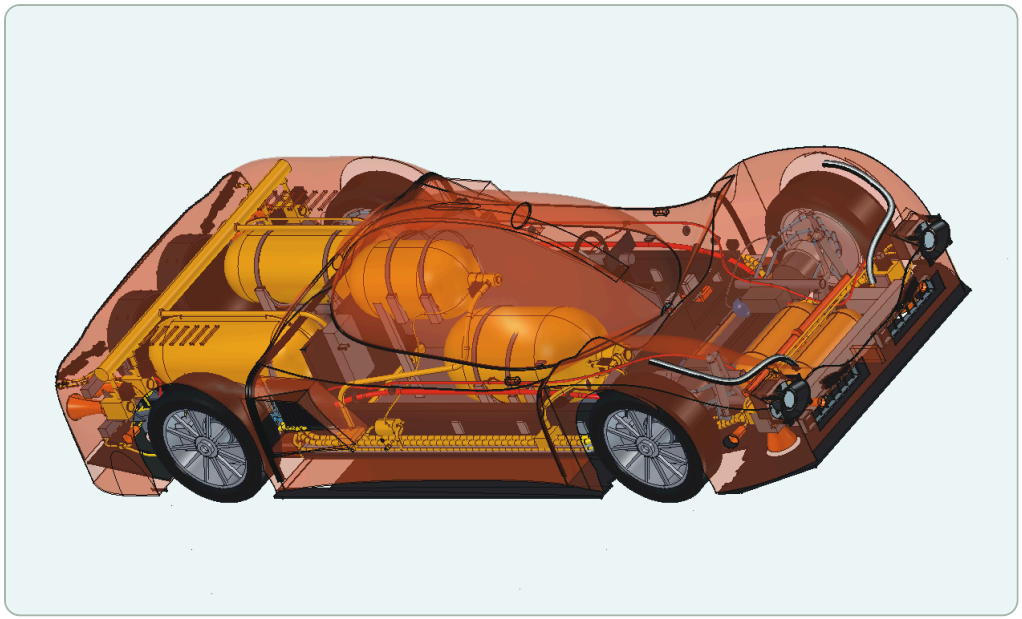

AWD

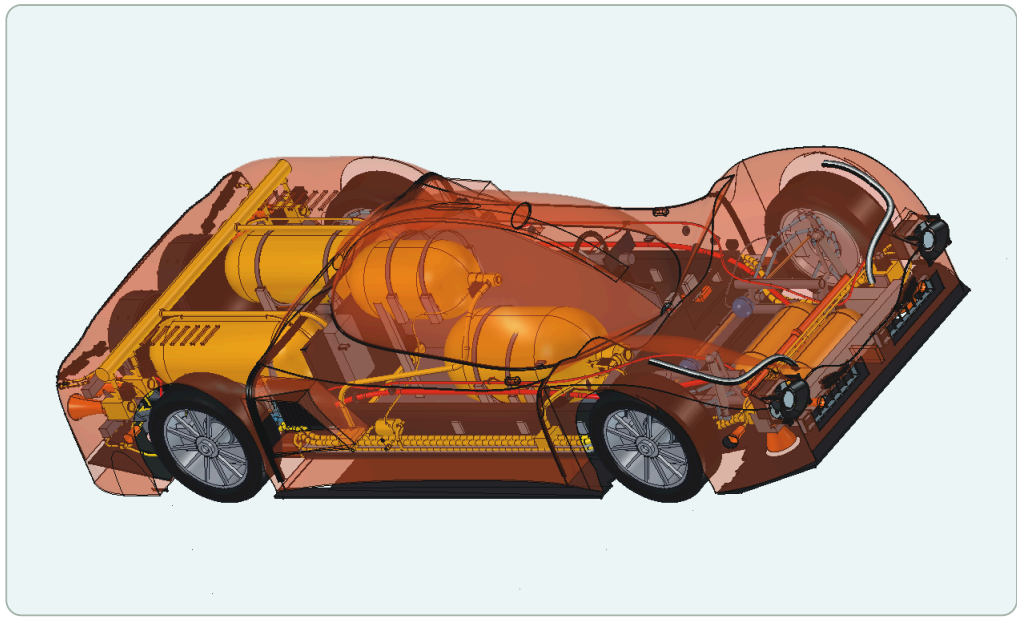

RWD

Saved assembly visibility · Orthographic pair with identical camera · Camera and bodies ·

02 / 24 · R06

Rear three-quarter view

Rear body and outlets with the car assembled.

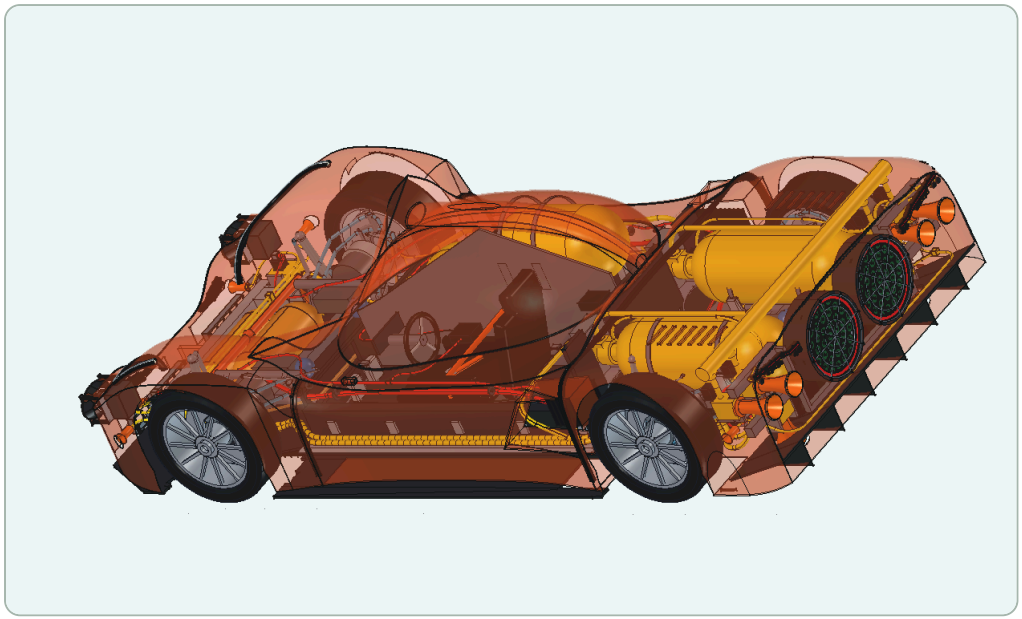

AWD

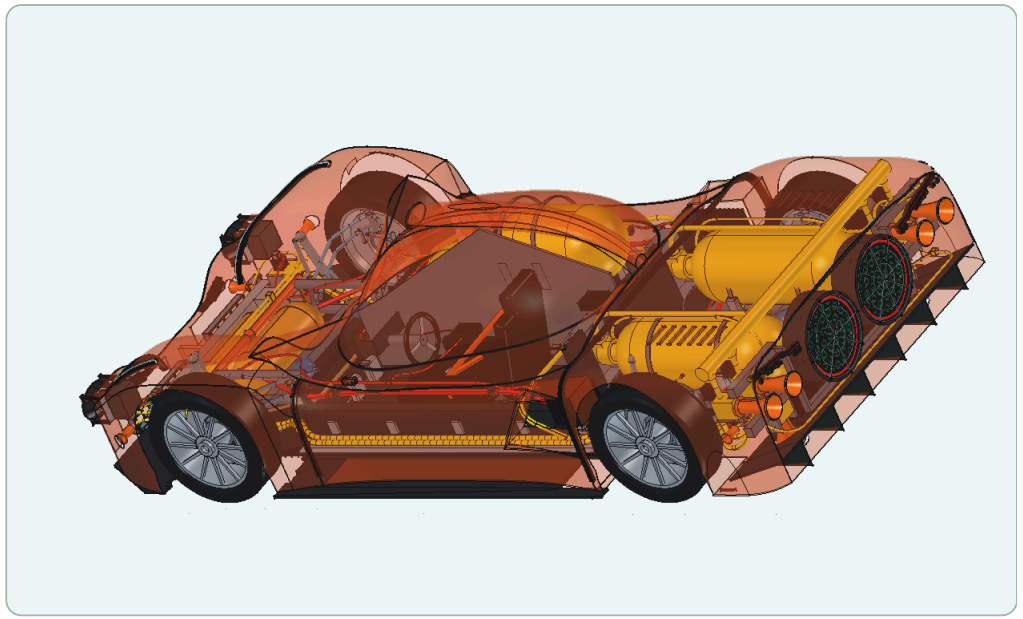

RWD

Saved assembly visibility · Orthographic pair with identical camera · Camera and bodies ·

Body profile

The longitudinal axis is horizontal. Both assemblies share a scale.

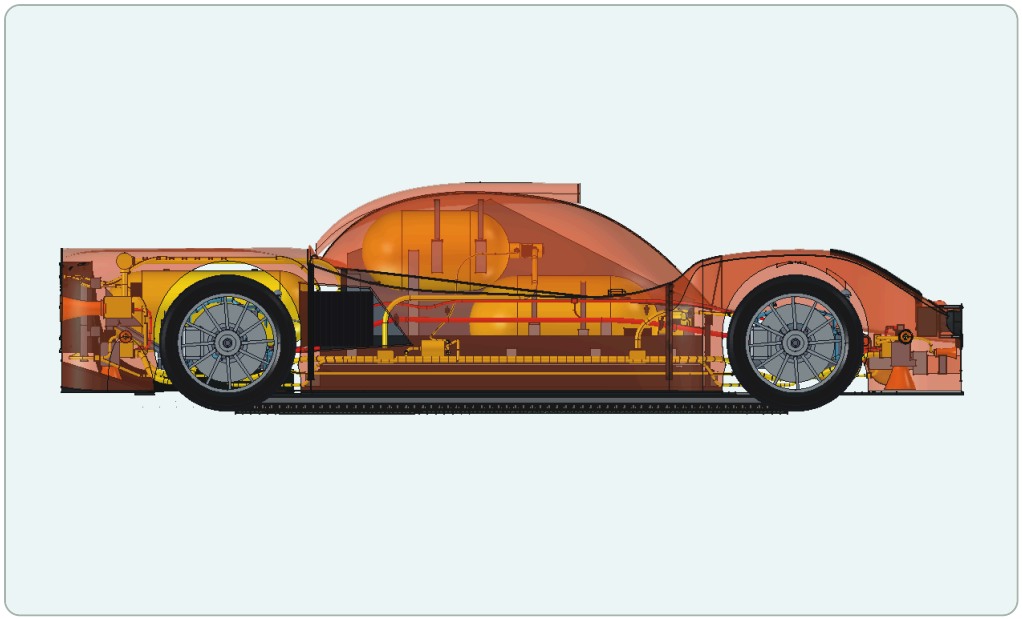

AWD

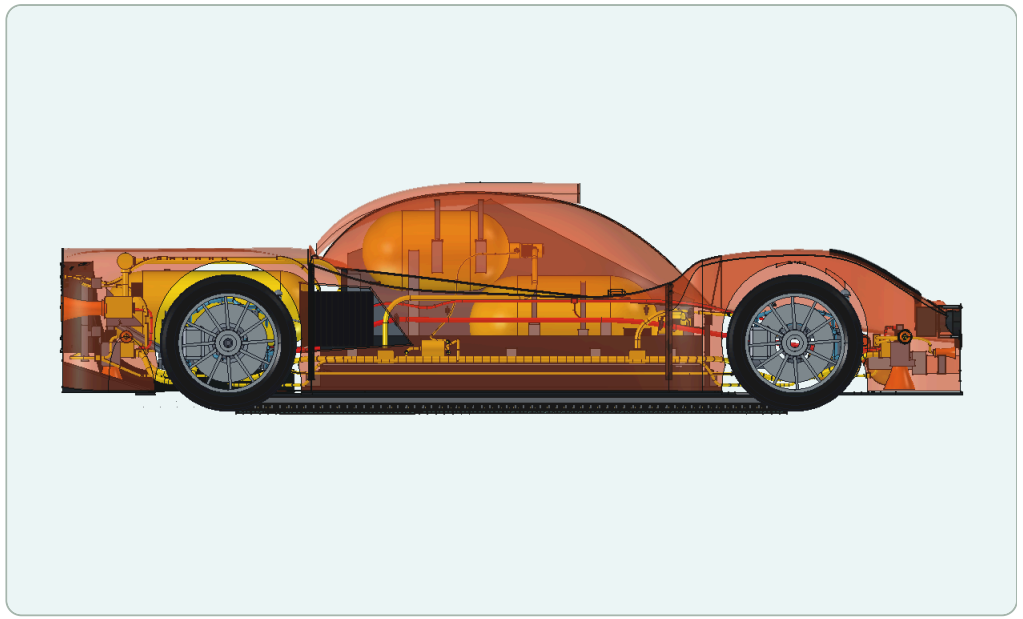

RWD

Saved assembly visibility · Orthographic pair with identical camera · Camera and bodies ·

04 / 24 · R06

Top view

Compare body width, cockpit and wheel openings.

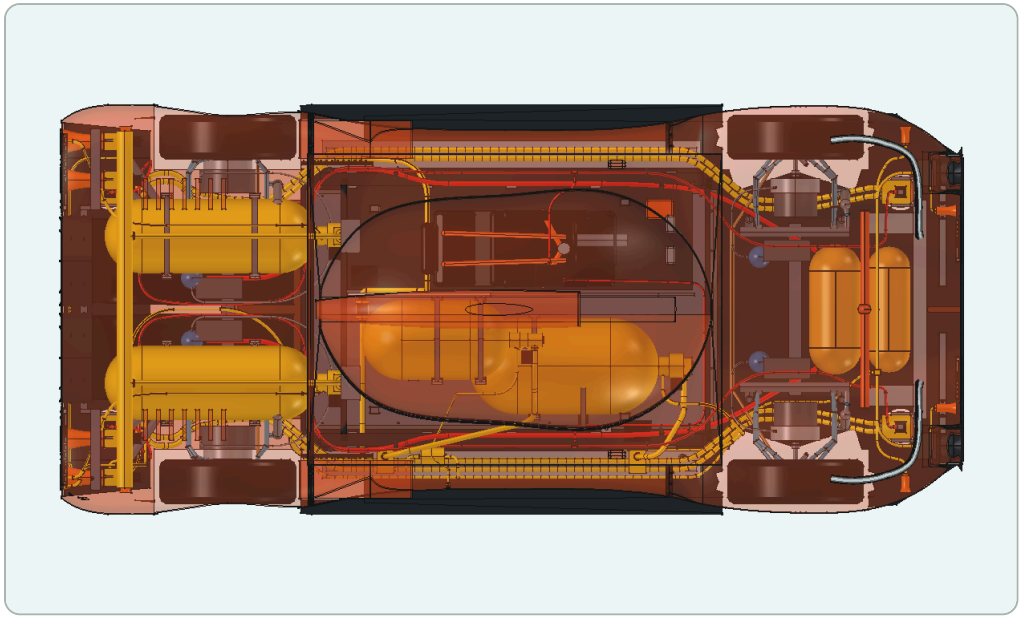

AWD

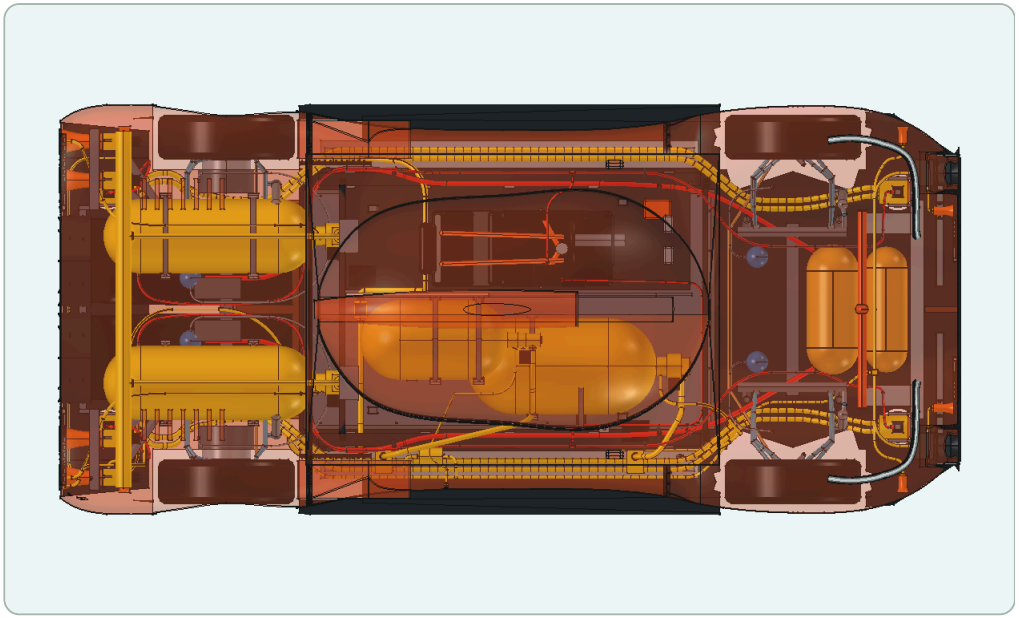

RWD

Saved assembly visibility · Orthographic pair with identical camera · Camera and bodies ·

Underbody and airflow hardware

Underbody with tyres, diffuser and fan housings. See sheet 13 for the isolated hardware.

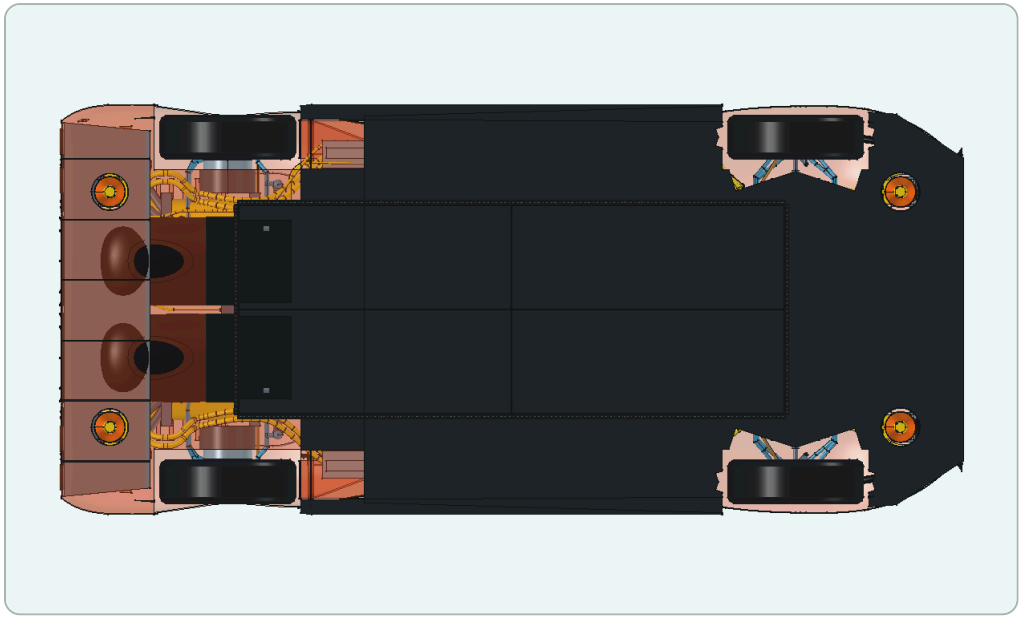

AWD

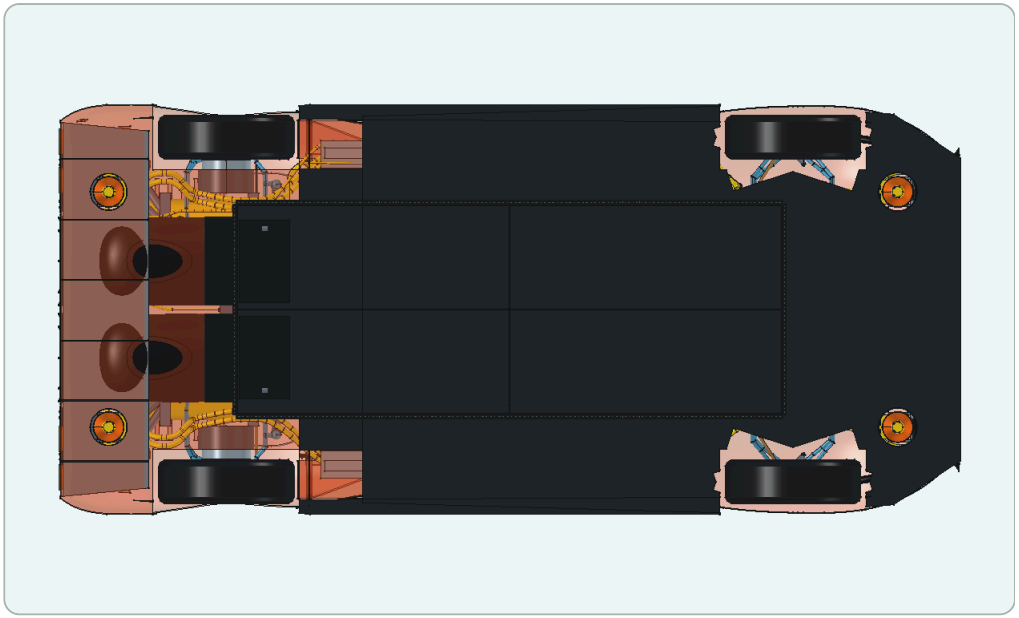

RWD

Saved assembly visibility · Orthographic pair with identical camera · Camera and bodies ·

Exterior panels

Body panels use the saved orange presentation profile.

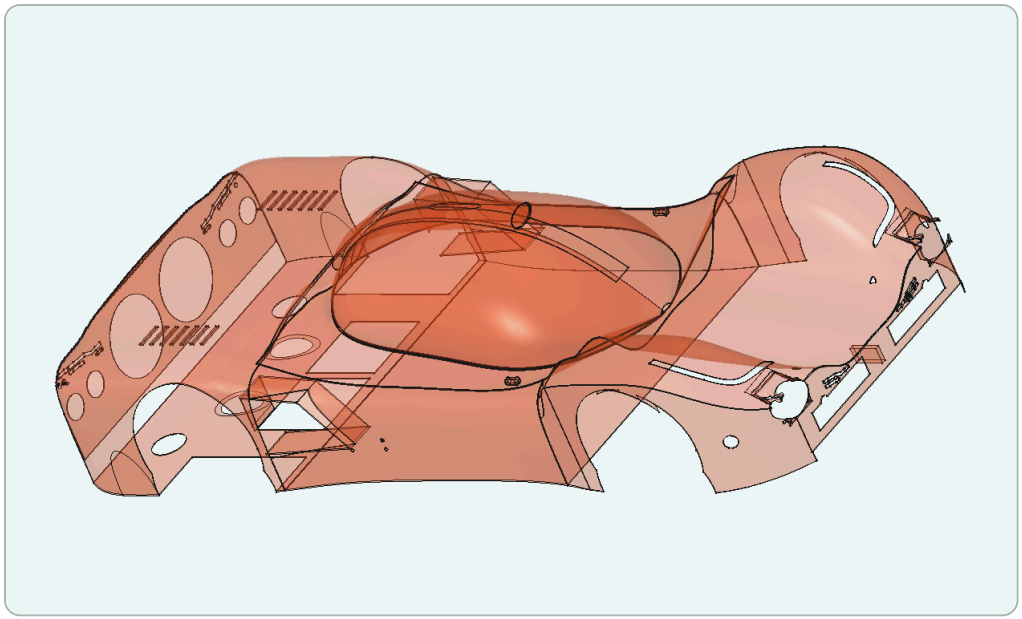

AWD

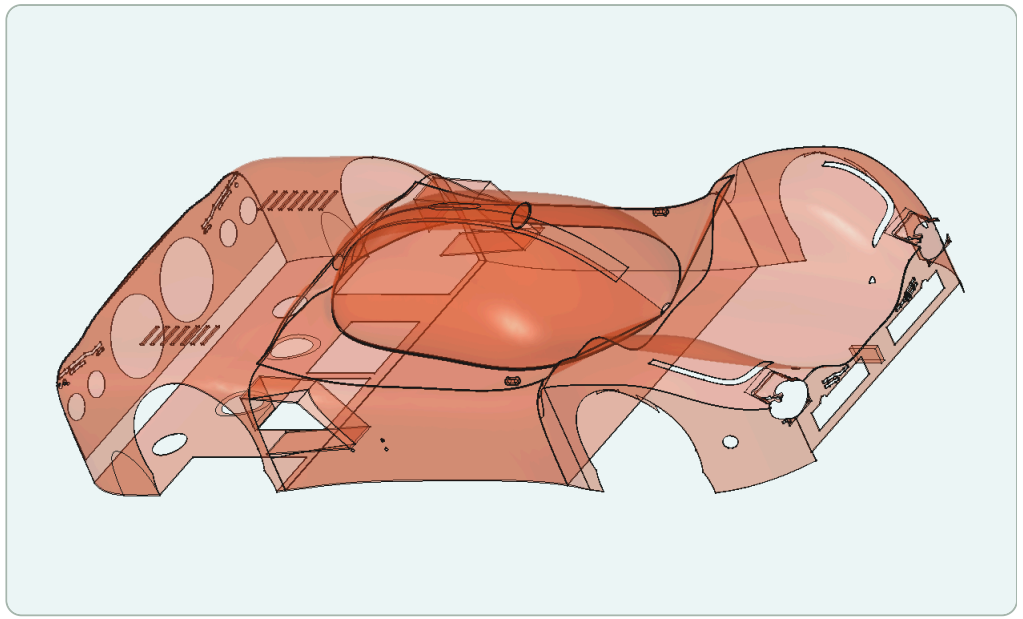

RWD

Isolated parts · Orthographic pair with identical camera · Camera and bodies ·

07 / 24 · R06

Structural members

Floor, sills, bulkheads, mounts and crossmembers coordinated by the shared R06 skeleton.

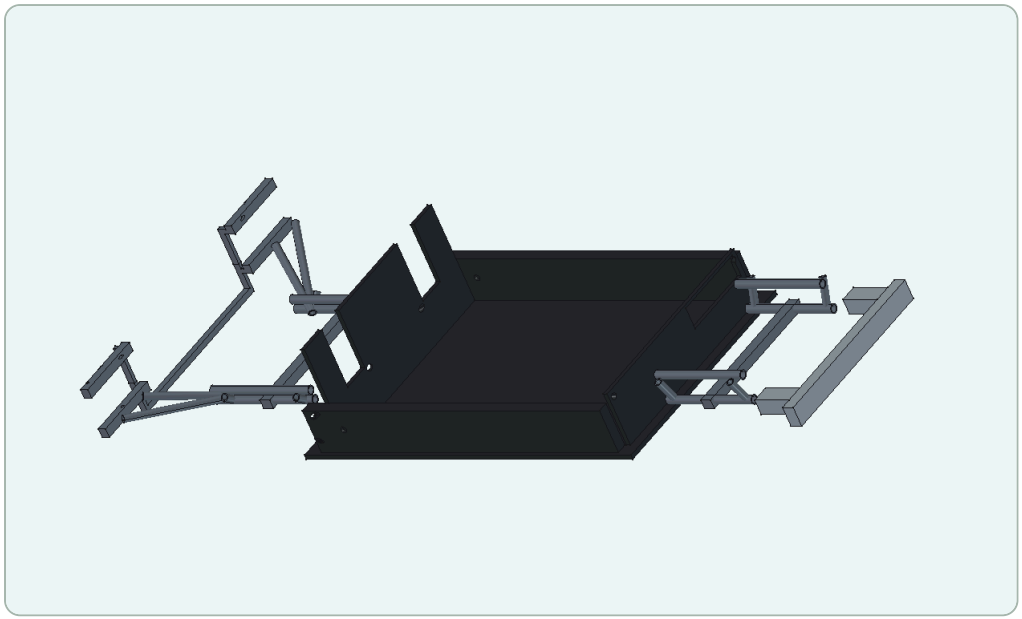

AWD

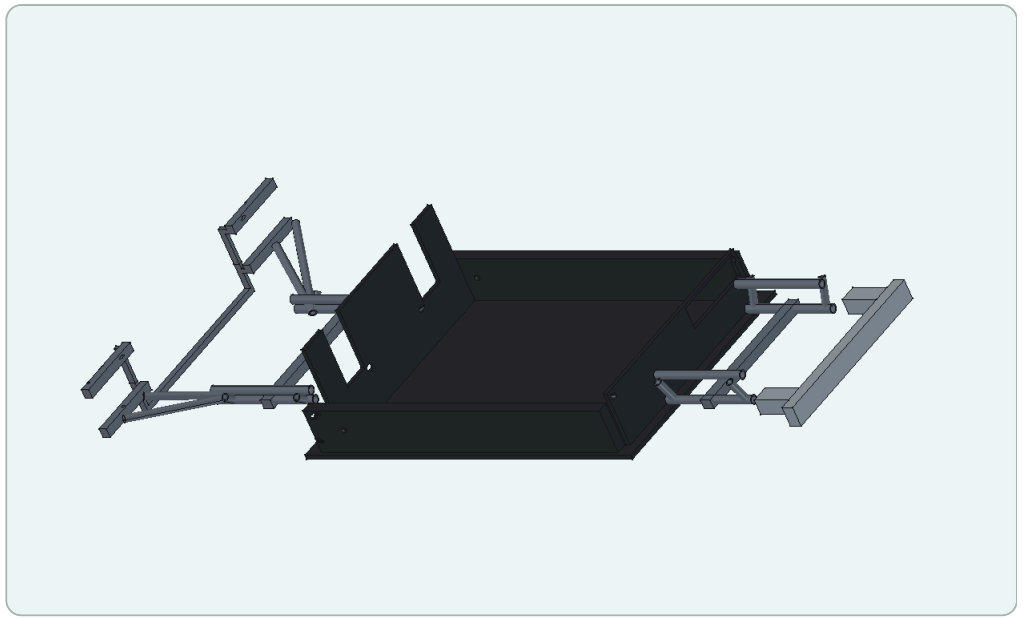

RWD

Isolated parts · Orthographic pair with identical camera · Camera and bodies ·

08 / 24 · R06

Drivetrain differences

AWD includes front electric drive. Wheels provide shared context.

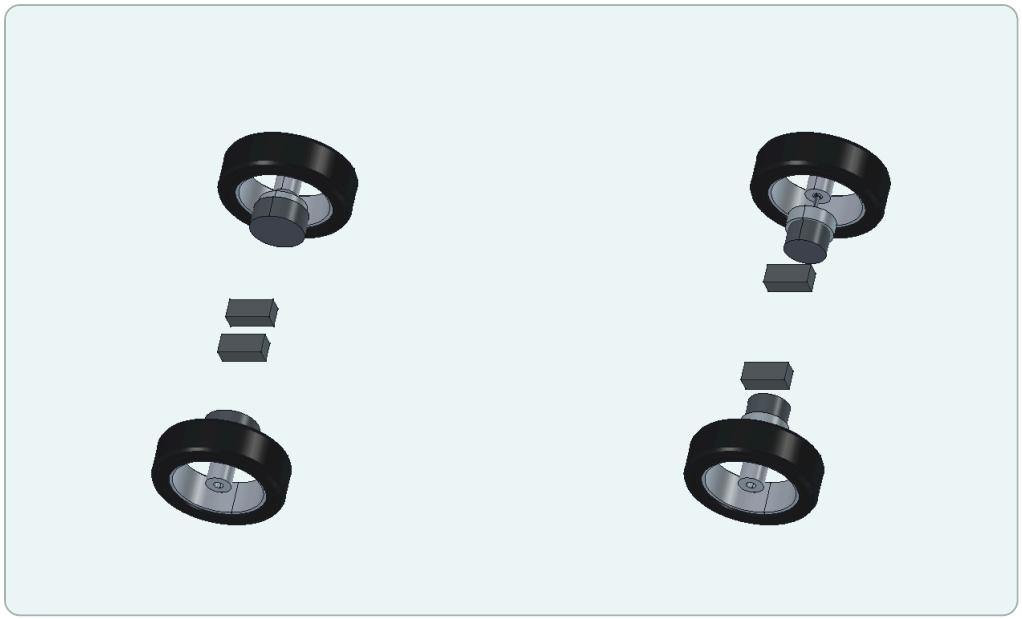

AWD

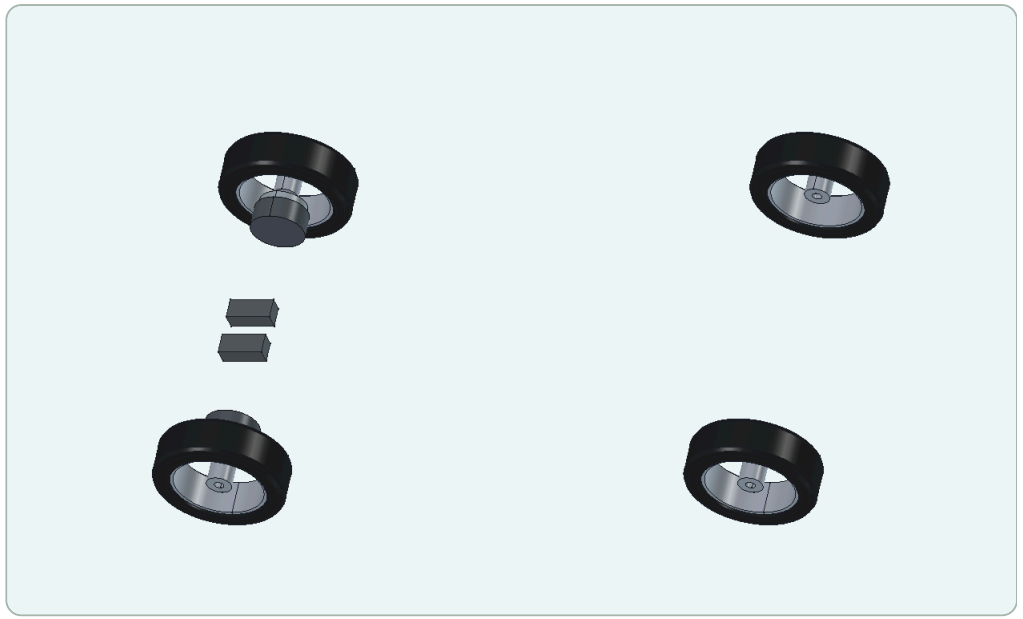

RWD

Isolated parts · Orthographic pair with identical camera · Camera and bodies ·

Front suspension and steering

Wheels, arms, struts and steering links at the saved pose.

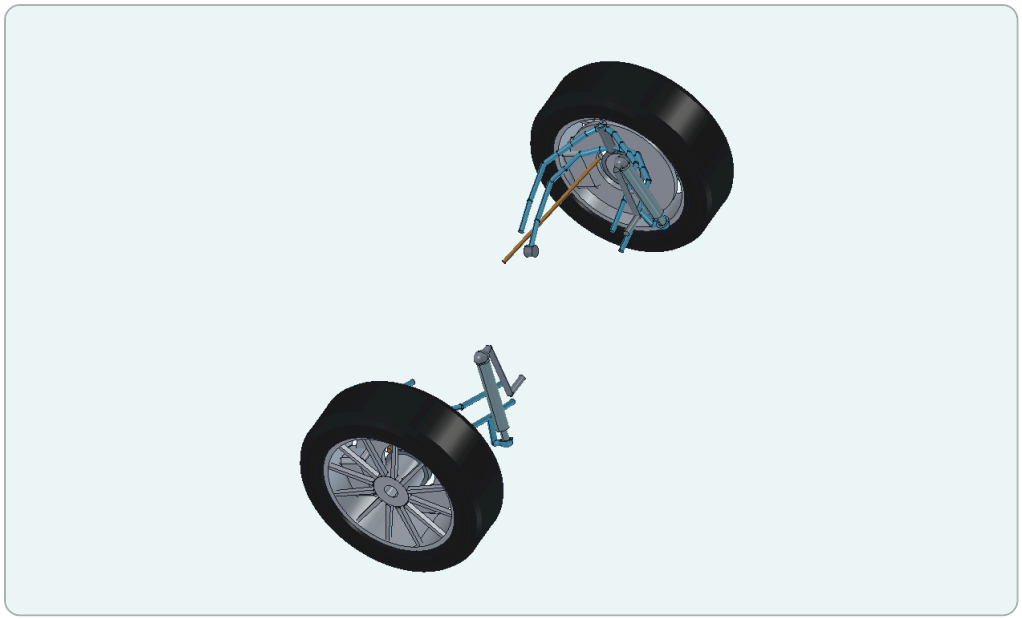

AWD

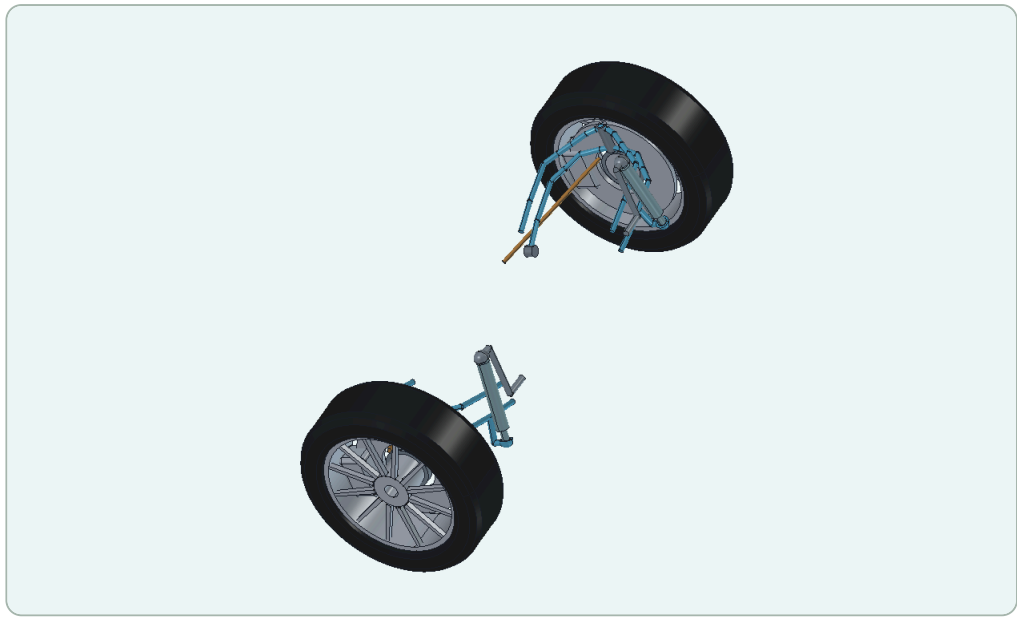

RWD

Isolated parts · Orthographic pair with identical camera · Camera and bodies ·

Rear suspension

Rear hubs, arms, struts and brakes.

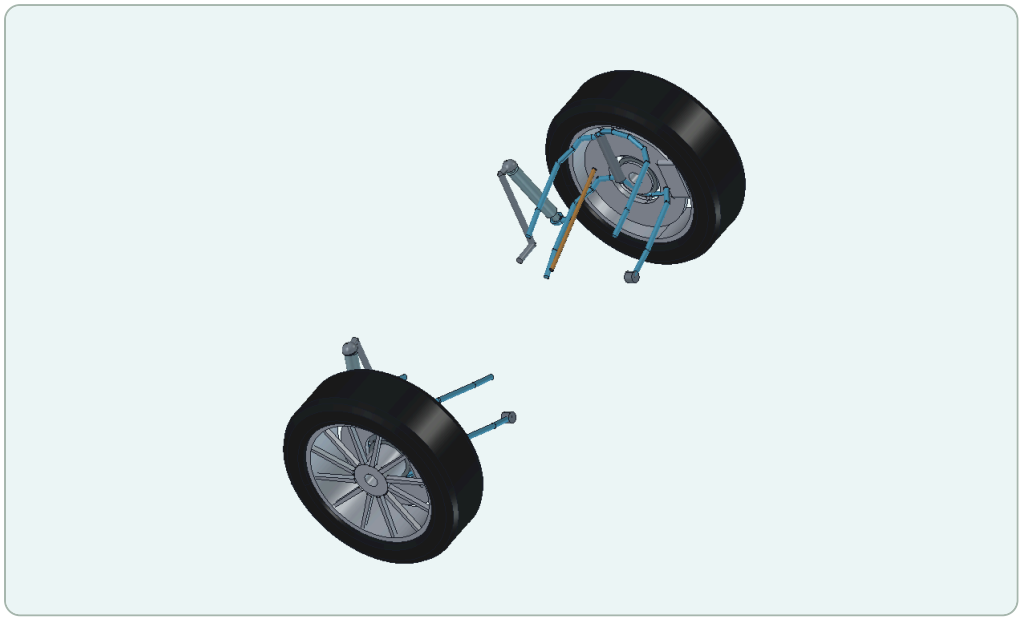

AWD

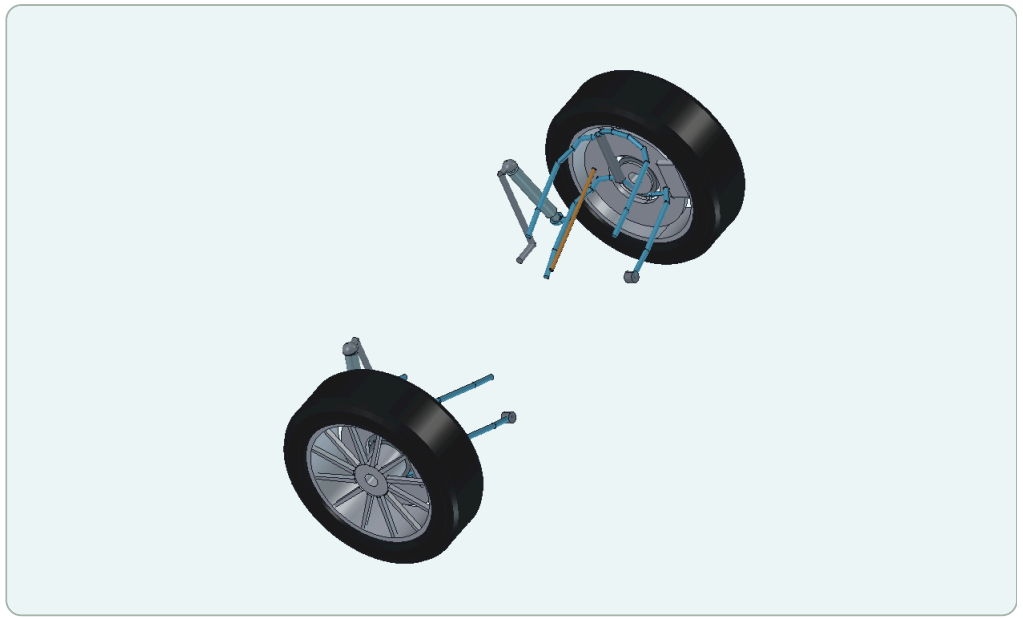

RWD

Isolated parts · Orthographic pair with identical camera · Camera and bodies ·

Battery and cooling

Modules, HV disconnect and cooling with the case and lid hidden.

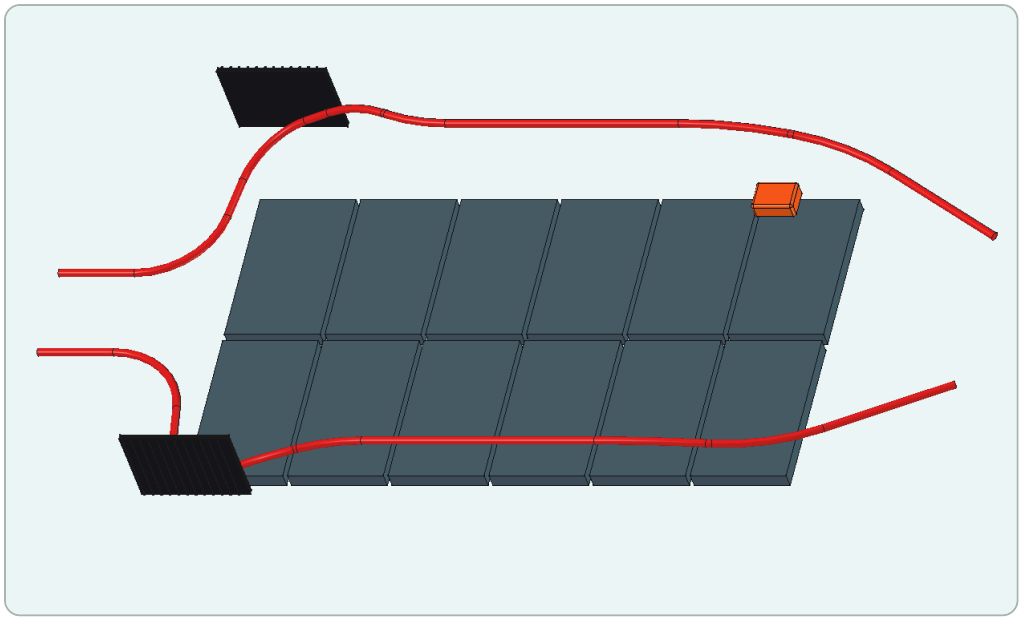

AWD

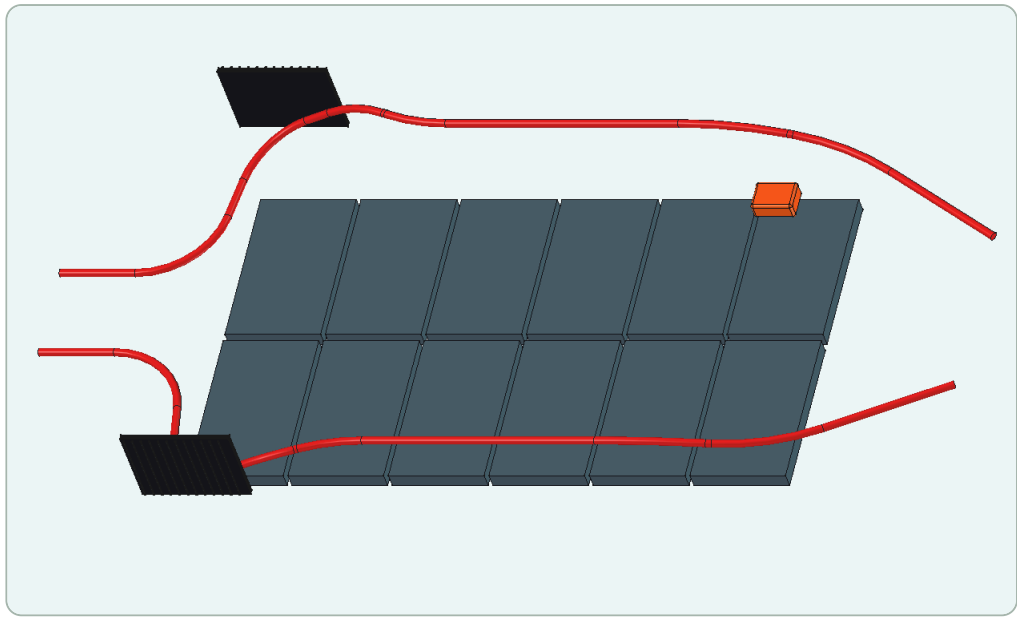

RWD

Isolated parts · Orthographic pair with identical camera · Camera and bodies ·

Cockpit and bulkhead

Driver seating, steering and gas bulkhead isolated.

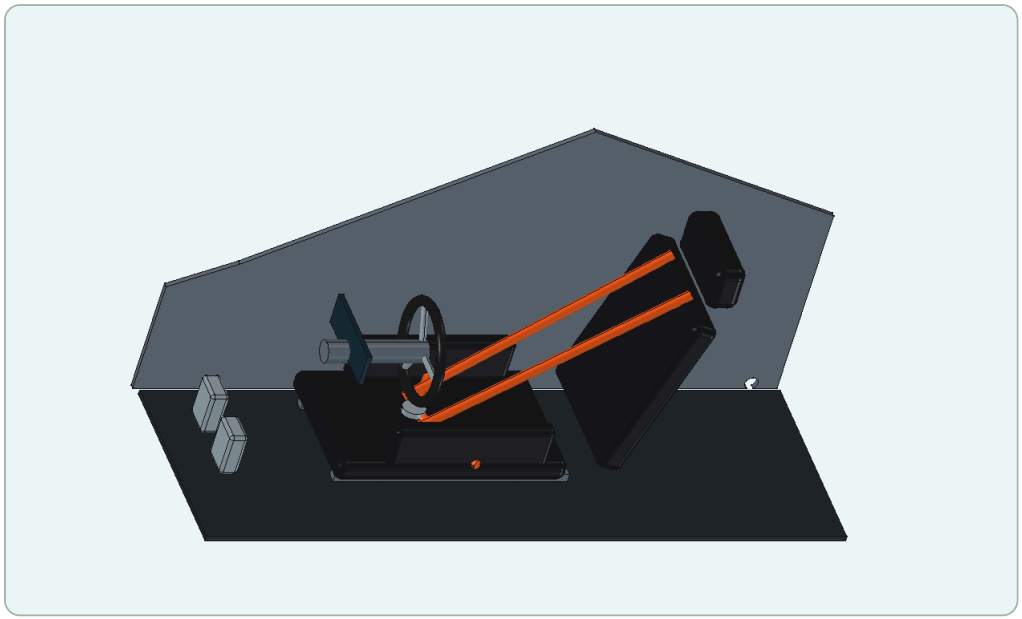

AWD

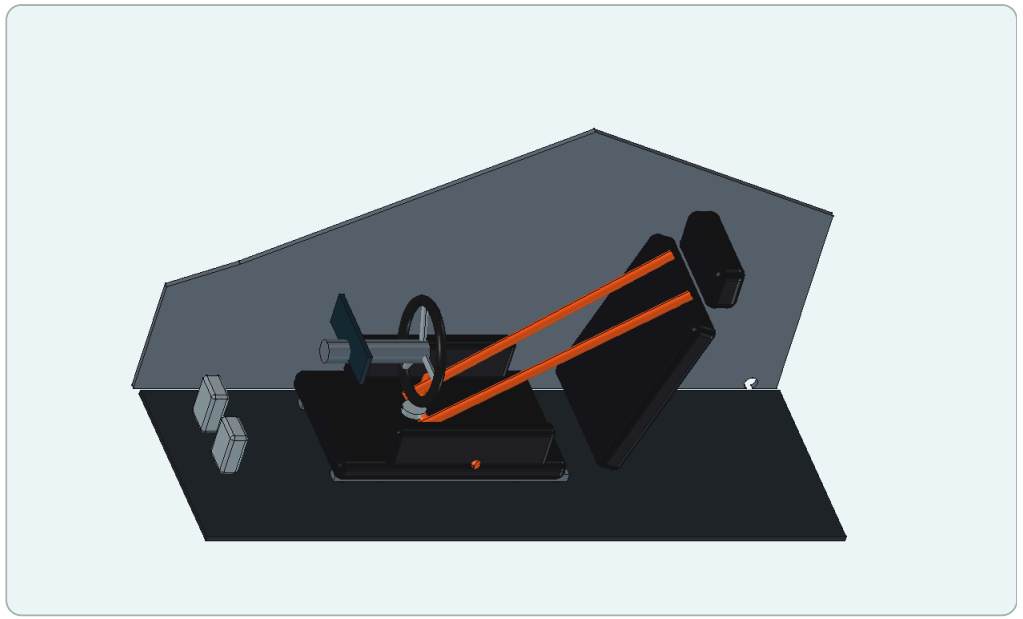

RWD

Isolated parts · Orthographic pair with identical camera · Camera and bodies ·

Fans and ducts

Close rear view of both housings, guards and ducts. Sheet 05 shows the diffuser in context.



AWD



RWD

Isolated parts · Orthographic pair with identical camera · Camera and bodies ·

Nozzles and control circuit

Main, lift and control nozzles in their assembly positions.

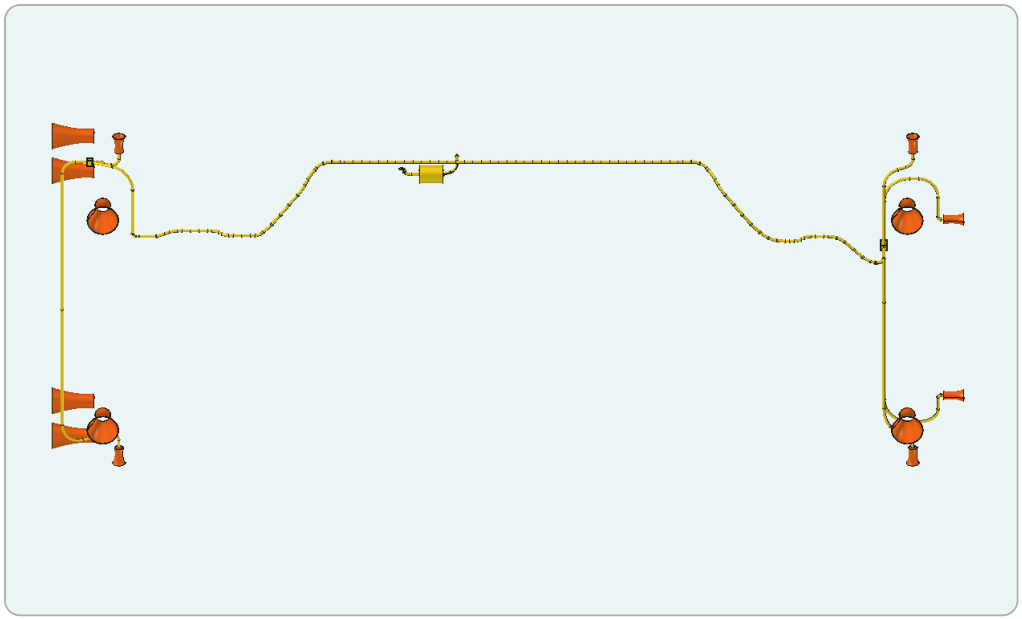

AWD

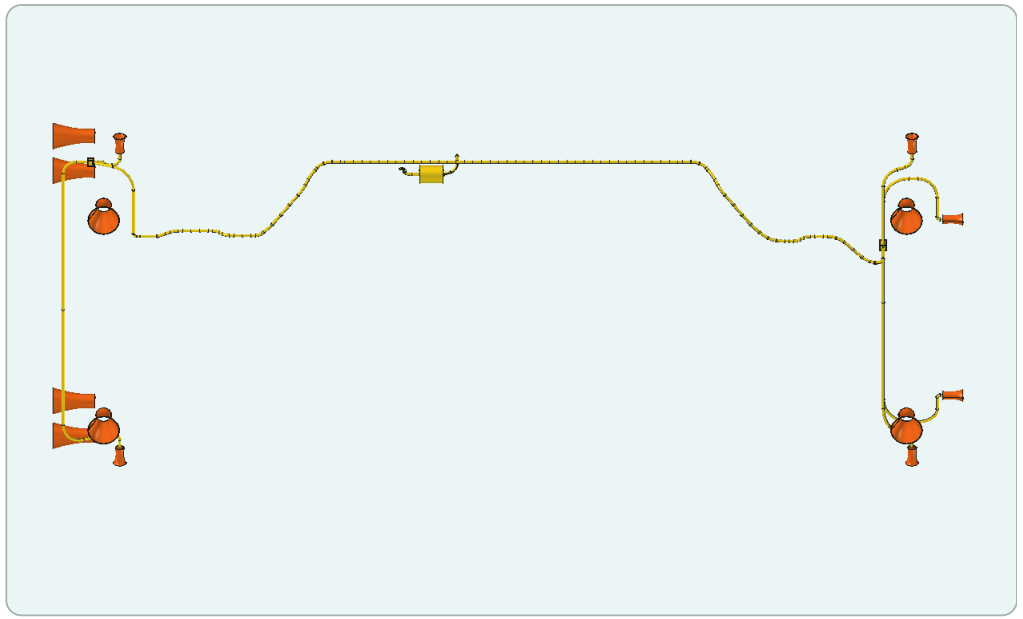

RWD

Isolated parts · Orthographic pair with identical camera · Camera and bodies ·

Landing reserve in context

Nose bay with two vessels and adjacent structure.

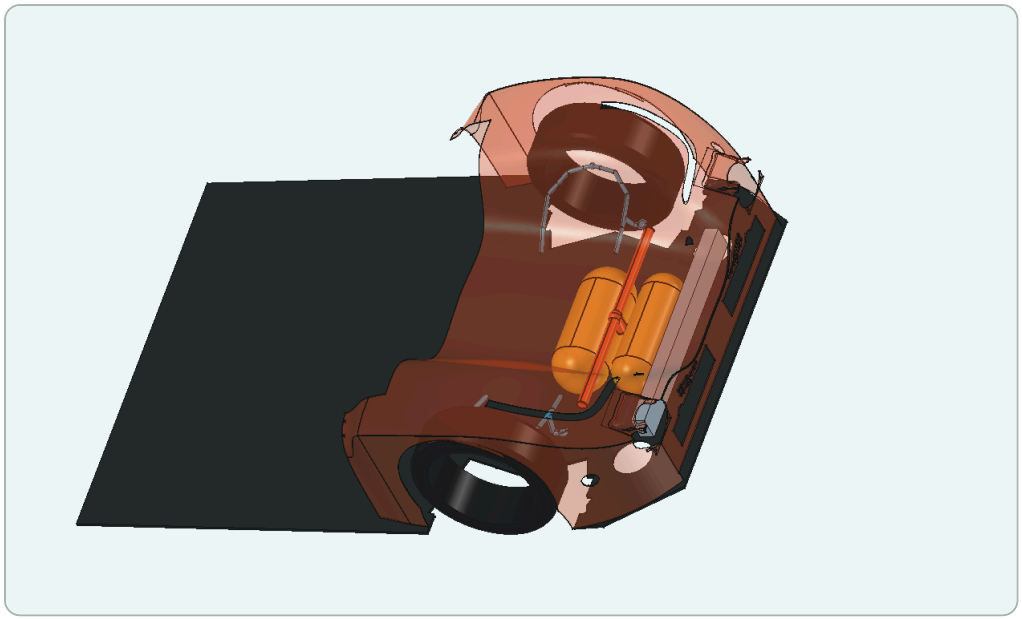

AWD

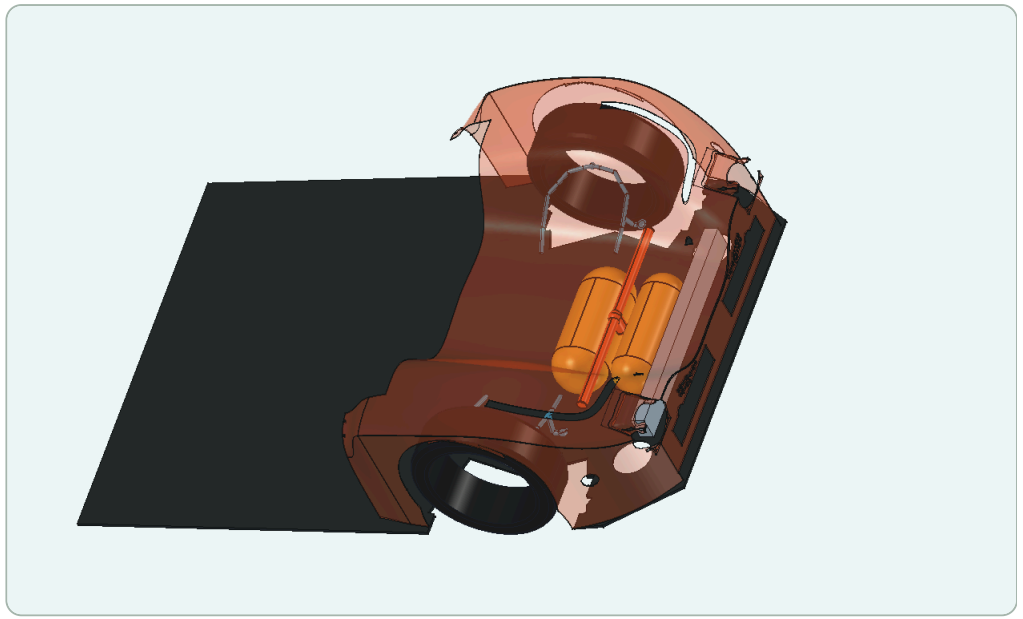

RWD

Isolated parts · Orthographic pair with identical camera · Camera and bodies ·

Vessels, collector and blanks

Close-up of the five R06 bodies. The collector outlets are blanked.

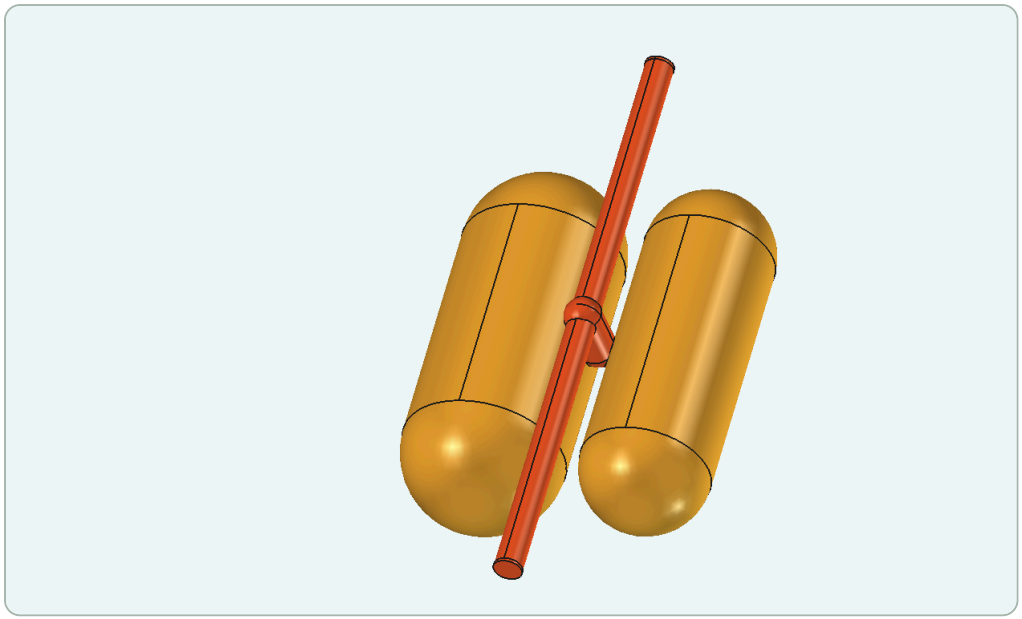

AWD

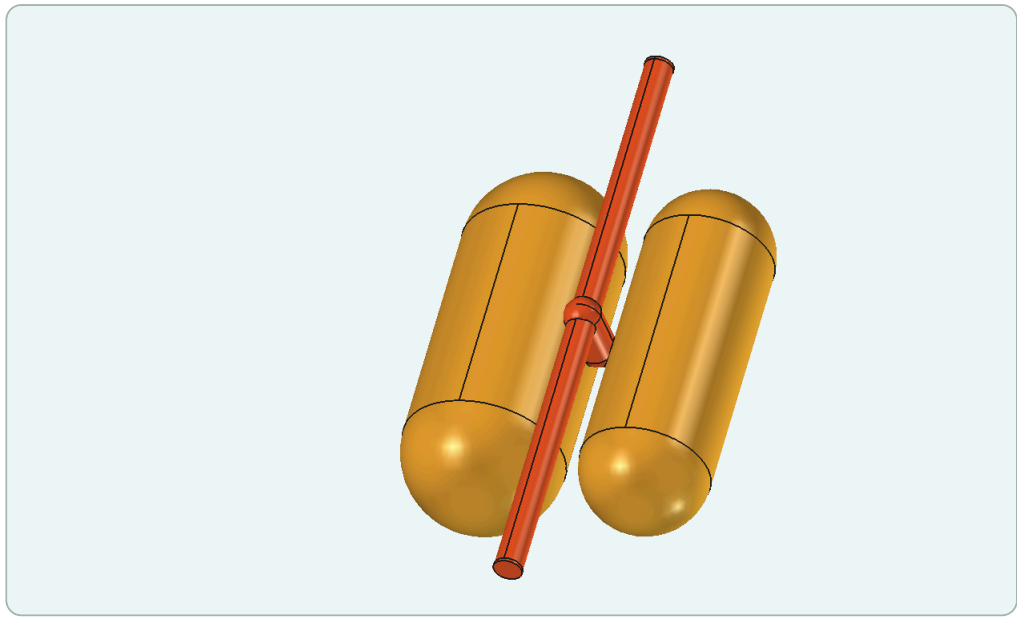

RWD

Isolated parts · Orthographic pair with identical camera · Camera and bodies ·

Longitudinal cut at Y=0

R06 coordinates, mm. Retained side Y ≥ 0. FreeCAD viewport clipping.

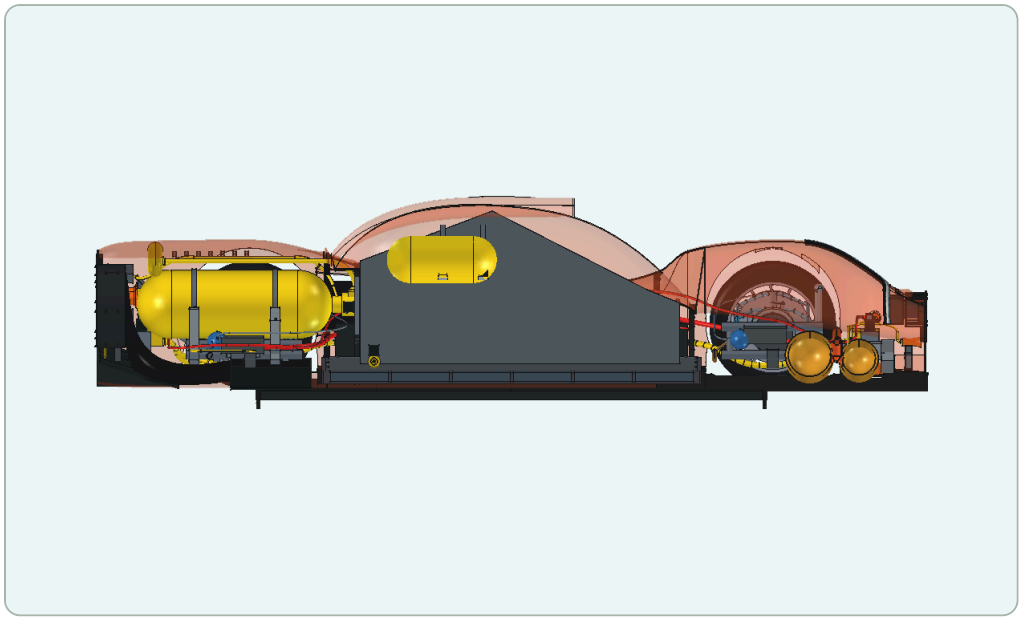

AWD

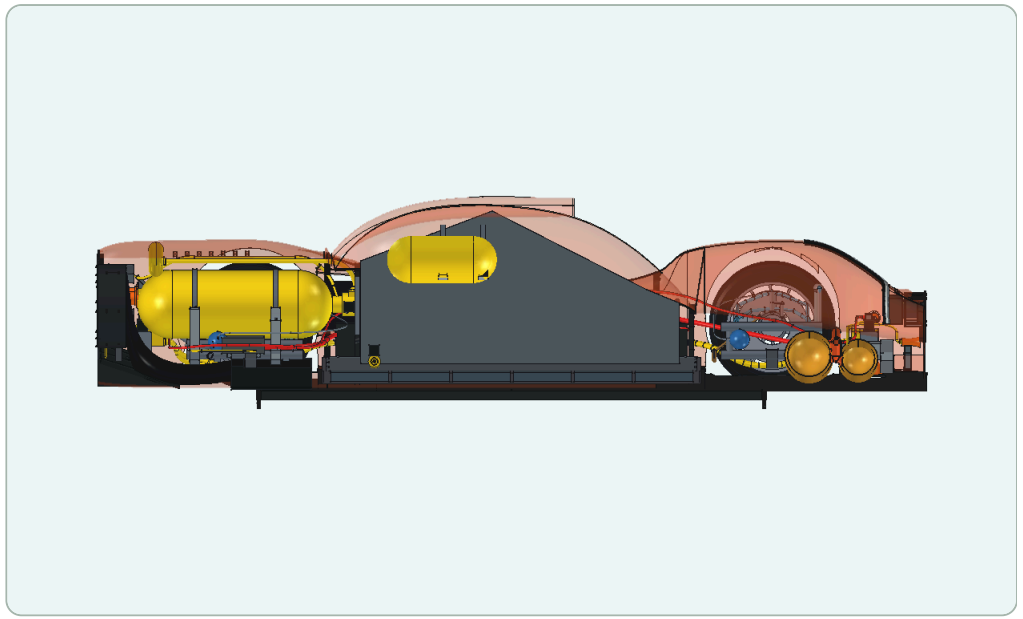

RWD

FreeCAD viewport clipping with open cut faces. · Orthographic pair with identical camera · Camera and bodies ·

Transverse cut at X=1550

World X points forward. Retained side X ≤ 1550 mm.

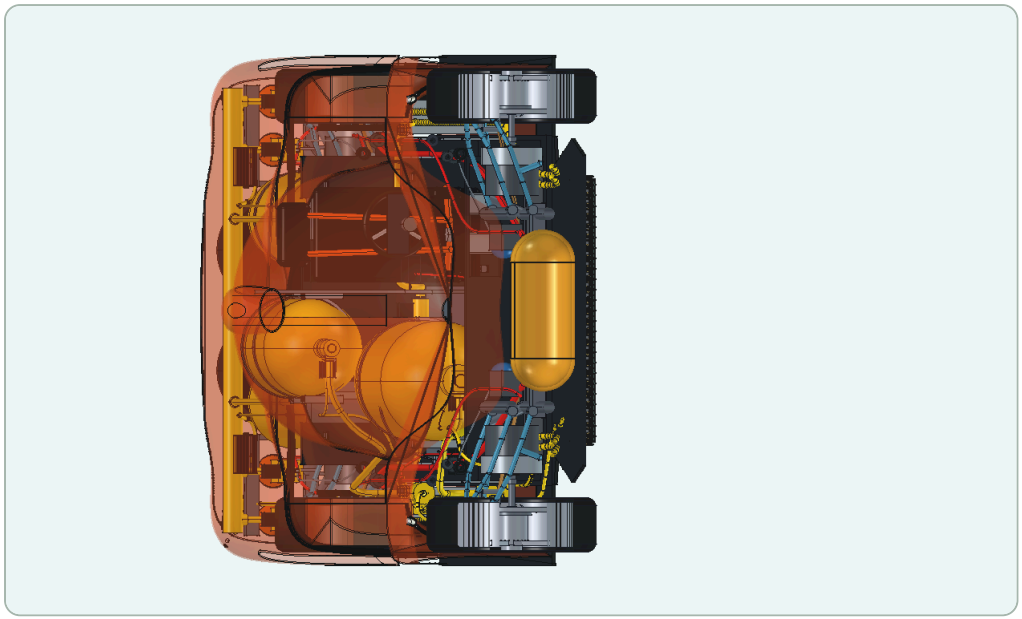

AWD

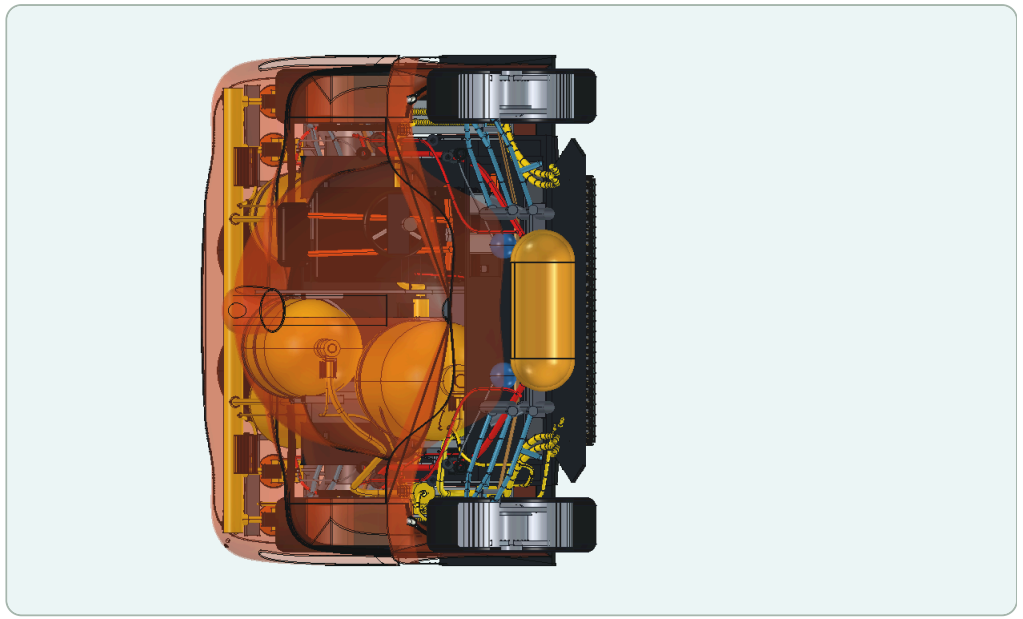

RWD

FreeCAD viewport clipping with open cut faces. · Orthographic pair with identical camera · Camera and bodies ·

Horizontal cut at Z=343

Top view. Retained side Z ≤ 343 mm. FreeCAD viewport projection.

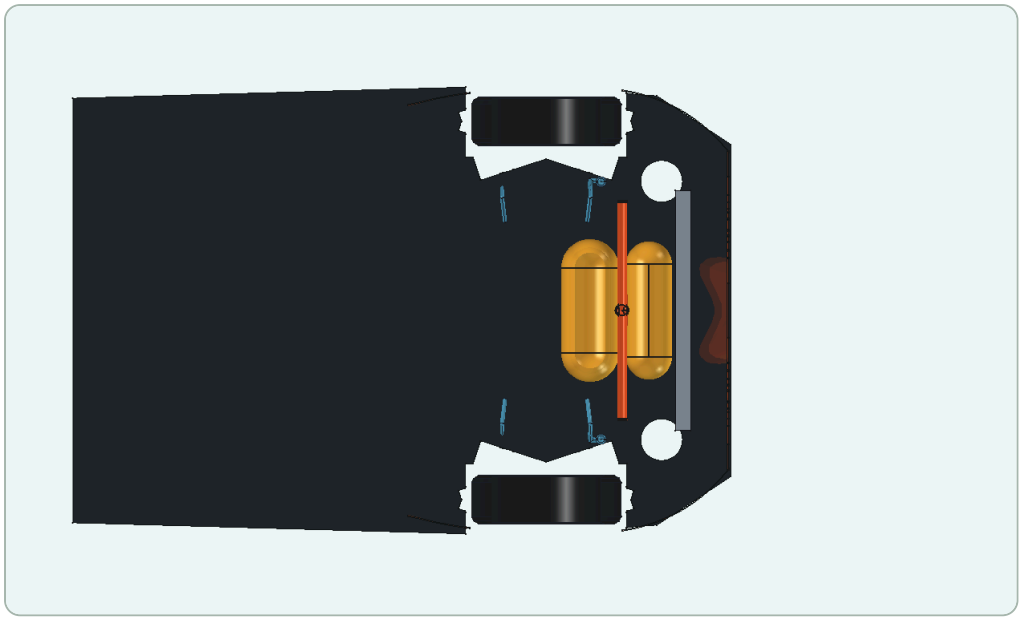

AWD

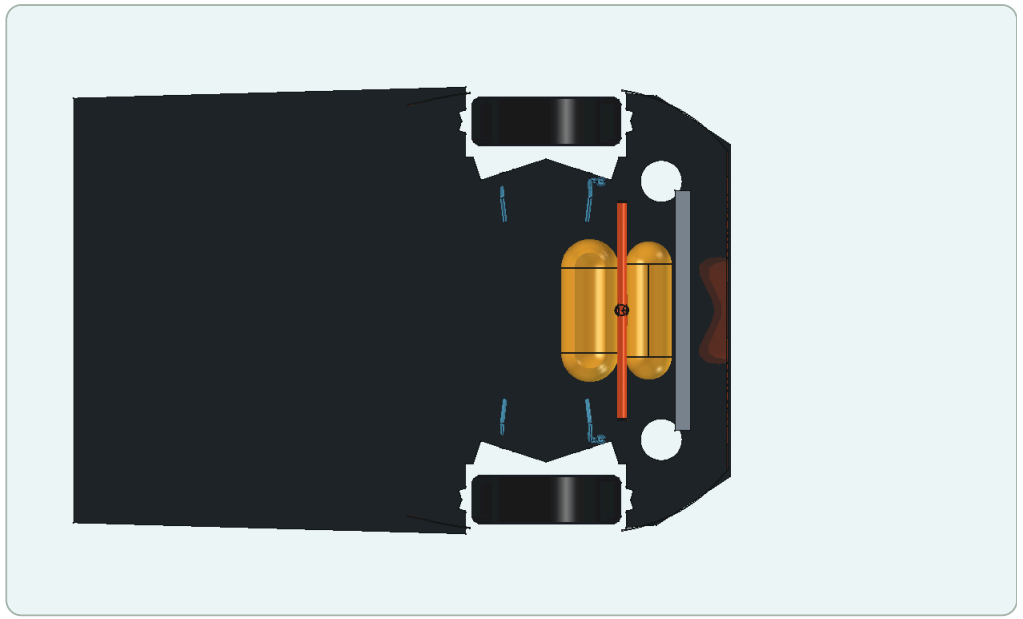

RWD

FreeCAD viewport clipping with open cut faces. · Orthographic pair with identical camera · Camera and bodies ·

T201 and T202 routes

Vent branches isolated. Visible geometry follows R06 packaging.

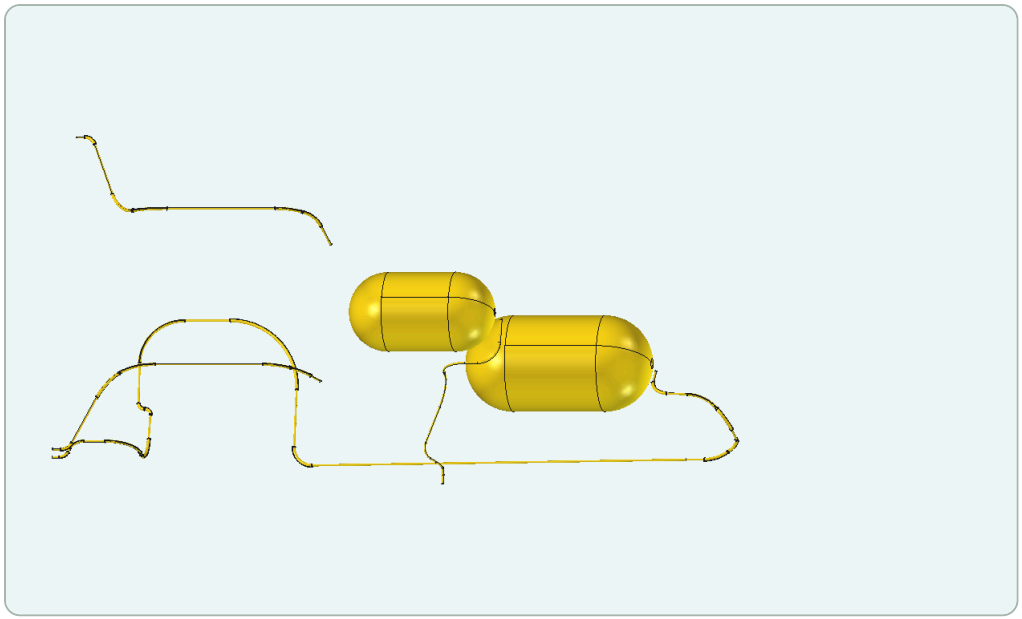

AWD

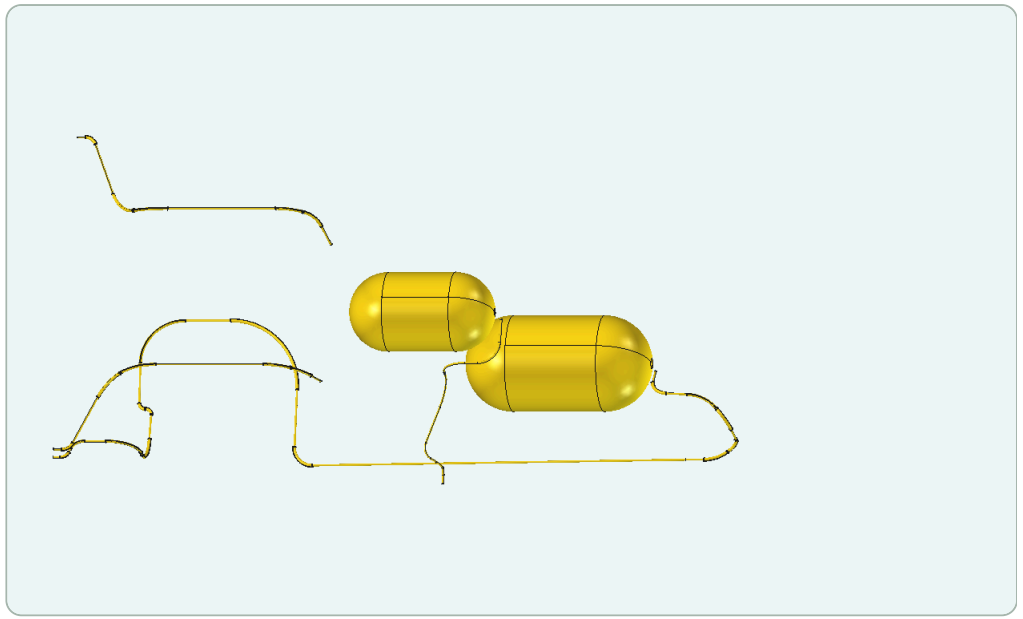

RWD

Isolated parts · Orthographic pair with identical camera · Camera and bodies ·

Suspension travel and steering

672 discrete front-wheel poses were checked at 1640 and 1648 mm track, −210 to +40 mm travel and ±18° steering. The chart shows sample counts. The records cover the landing package and the listed moving parts.

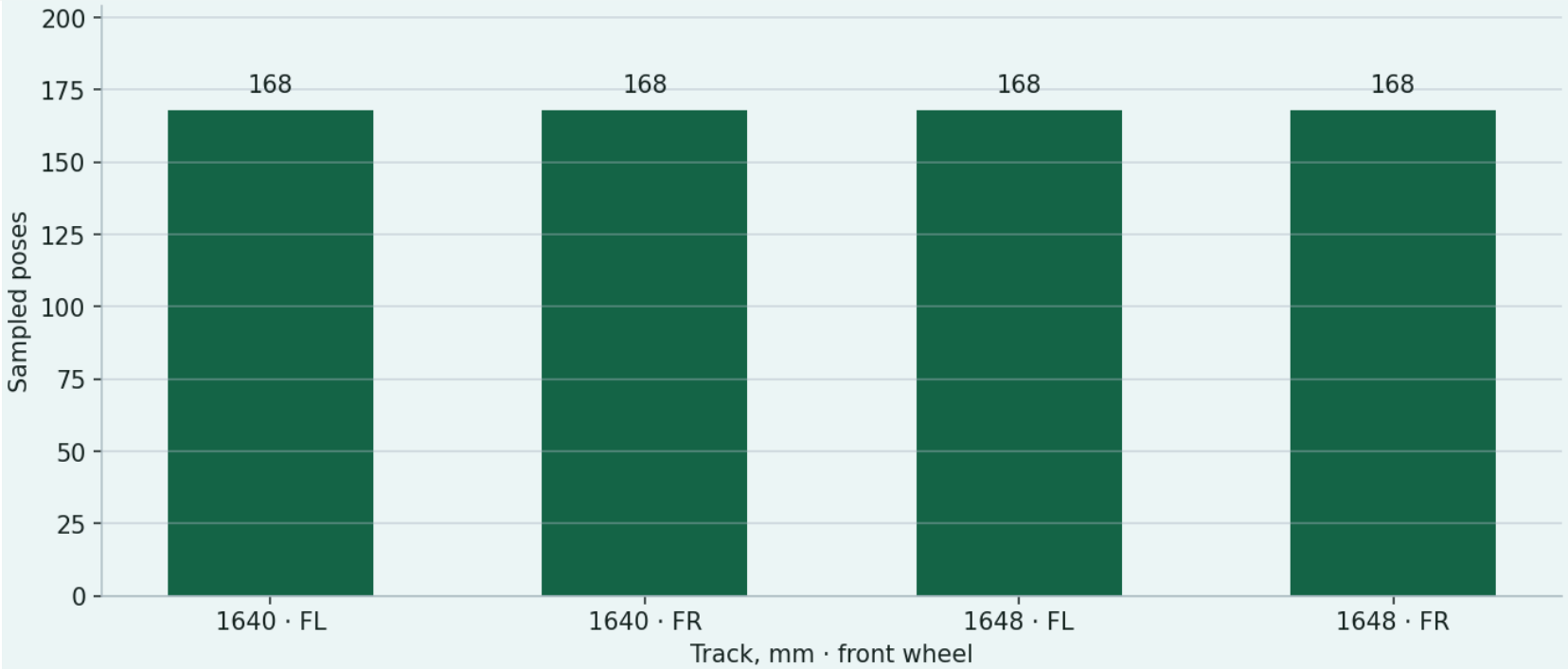

R06 calculation data

R06 sources · motion_FL_1640.json · motion_FR_1640.json · motion_FL_1648.json · motion_FR_1648.json ·

Landing package sections

Section curves come from the R06 BReps. Each part has its own Z elevation. The two vessels have 31.29 L of internal volume. The smallest checked clearance to nearby fixed parts is approximately 4.22 mm.

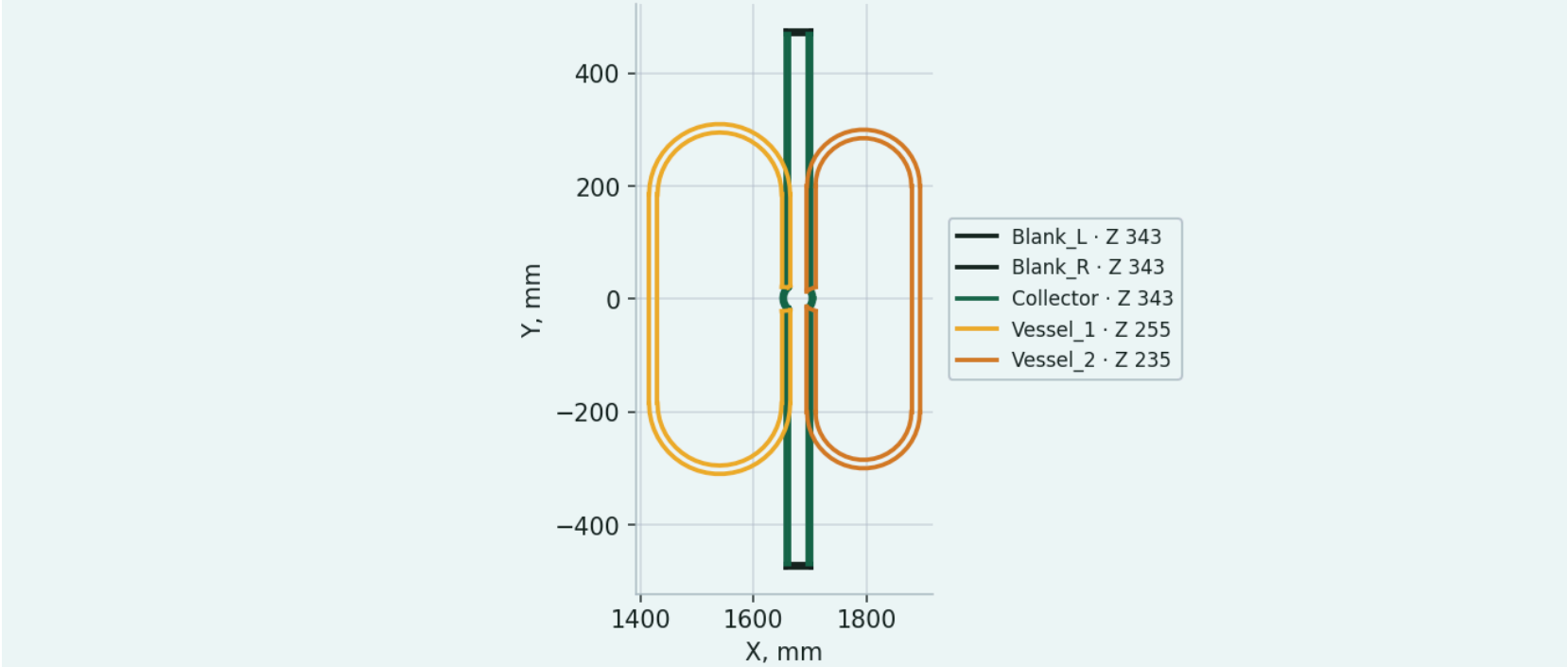

R06 calculation data

R06 sources · reserve_sections.json · native_saved.json · r06_results.json ·

Conditional AWD and RWD manoeuvre

The shared trajectory gives 2.646 s, a 5 m rise, 25 m range and −2.50 m/s vertical touchdown speed. Modelled lift-off mass is 2327.05 kg for AWD and 2227.58 kg for RWD. The stock case gives 0 s and 0 m. Status HOLD.

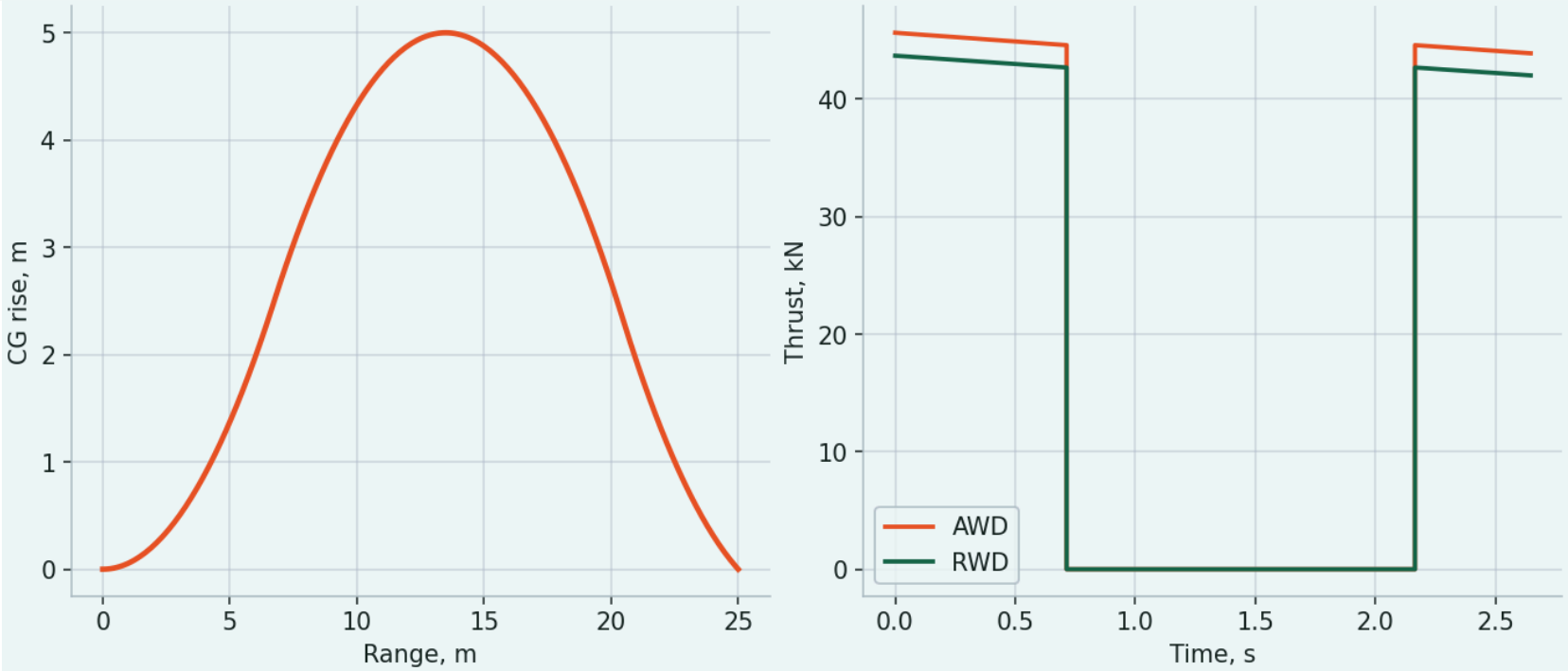

R06 calculation data

R06 sources · trajectory_AWD.csv · trajectory_RWD.csv · target_cases.csv · r06_results.json ·

Inventory and flow limits

The residual-pressure ranges remain disjoint even if the vessels are provisionally pooled. AWD inventory ceiling 5.20 MPa and flow floor 13.46 MPa. RWD 5.88 and 12.68 MPa. R06 calculation basis.

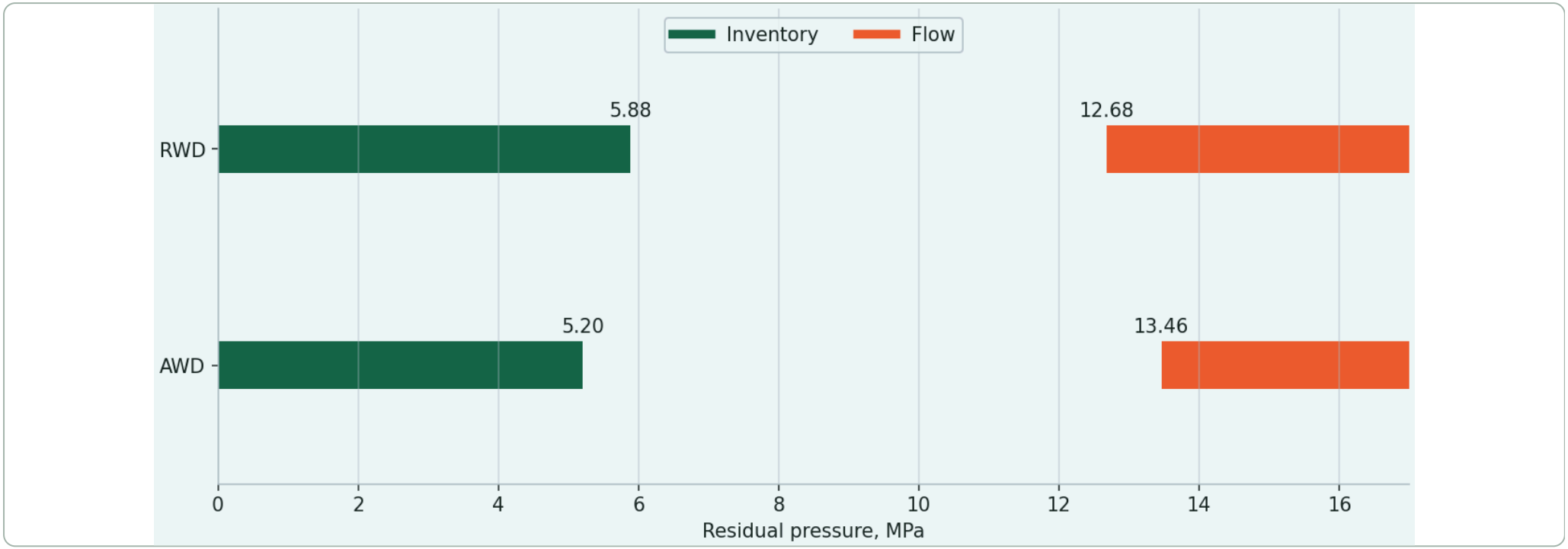

R06 calculation data

R06 sources · pressure_tradeoff.json · pressure_tradeoff.csv ·

Models and records

AWD FCStd · RWD FCStd · Shared R06 skeleton

Keep all three native files in one directory. Both assemblies use the orange presentation finish. Cuts and isolated views were created in the capture session. Analytical sheets use the frozen R06 results.

Shot map · AWD · RWD · RWD geometry verification · SHA-256