Flight and landing evidence

R12E provides the flight trajectory and touchdown inputs. R12F evaluates the revised landing configuration.

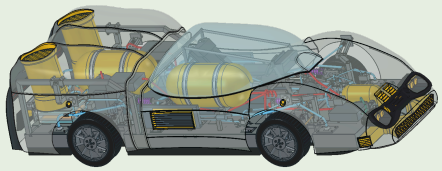

Saved R12E geometry

Flight and first contact

R12E stays airborne for 1.663 s. Its center of mass rises 0.926 m and range is 46.191 m. Forward speed is prescribed at 100 km/h. The 0.70 flow scenario does not lift off.

The descent speed at touchdown is 4.262 m/s. The R12E skirt reaches the plane within 20–21 ms. Free motion beyond the R12E limit is excluded from replay.

Calculation · JSON CAD contact

R12F landing results

The skirt edge is 60 mm higher. Initial wheel position is −93 mm from datum. Scenarios assume a flat surface, straight steering and prescribed component properties.

Case	Body, mm	Moving part, mm	Distance, m	Support, s
Nominal	64.95	33.07	107.65	7.16
Grip 0.35	64.95	33.07	146.75	10.00
-1° / -1°	31.43	22.92	146.76	10.01
-1° / +1°	24.05	21.33	146.76	10.01
+1° / -1°	37.22	24.75	146.76	10.01
+1° / +1°	27.80	22.19	146.76	10.01

The last two columns run from first contact to the end of the stable-support window. Clearances come from rigid FreeCAD geometry checks.

Loads and limits

Peak combined tire load **166.3 kN**. Travel from datum -96.0…+52.3 mm. Peak front strut force 165.9 kN. Screened shear at the existing M8 1.17 GPa. **HOLD**.

Across 4,105 selected pair checks, no new overlaps were found. Structural strength, validated component curves, wheel spin-up and full steering kinematics remain open.

Geometry audit Load path Landing results

AIR R01 · R12E

Removal and refitting of both cassettes were checked with a 0.50 mm budget. Tool access was screened for 20 operations. This evidence applies to saved R12E.

AIR acceptance record

Model provenance

R12E `8acd1691d196dcb639adc9a274fa1e6a260baa37d7fd3a50258dbe83ff48042e`

R12F `ca9087a5e5b6787bce8204e6b445fb1013ad9952086f4831574f660538dba4e7`

Replay meshes use visible FCStd bodies. Small details are omitted for playback performance. The replay uses downsampled, saved time series.

R12H model · FCStd R12G model · FCStd R12F model · FCStd R12E model · FCStd SHA-256

VEKTOR E-26 · R12G

Landing load path

Two pushrod pins at each corner changed to Ø28. Joint centers are retained. Added mass comes from CAD volume.

Conditional stop from touchdown	7.16 s · 107.65 m
Minimum pin yield ratio with concentrated bearing	1.56
Strut neck stress screen	941 MPa
Mount bending plus axial stress	12356 MPa
Residual sampled intersections	72

Isolated mount. The linear estimate beyond yield flags overload without predicting the failure state. **HOLD**.

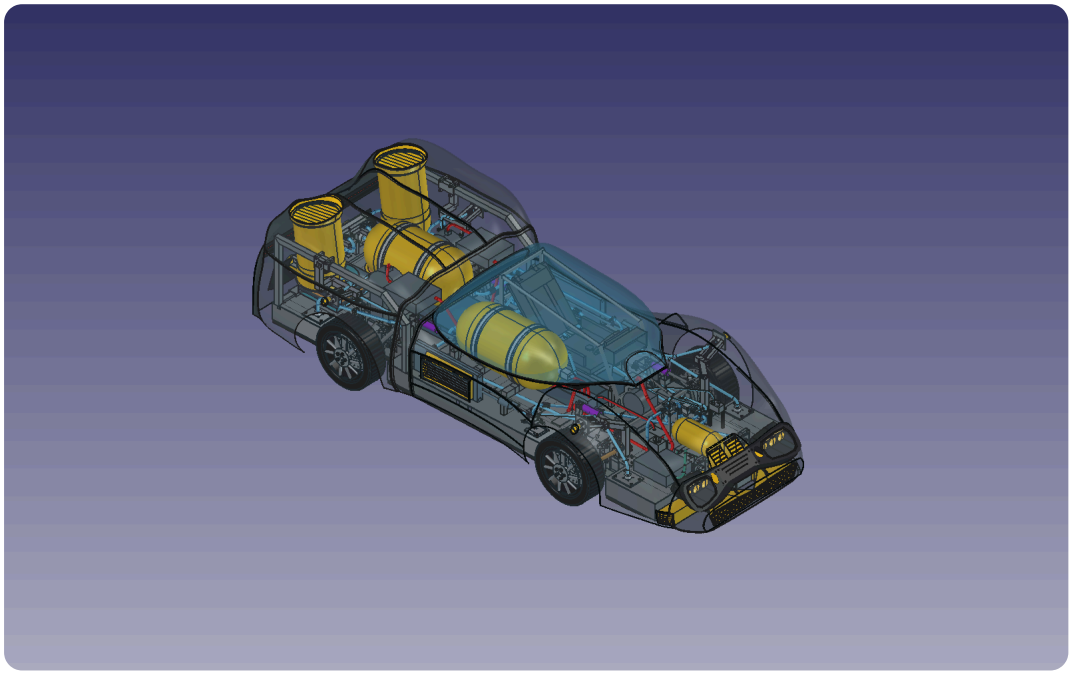

SHA-256 R12G · 08804b35999852c6e7b6d4958331af14a74d41f5215c998f39aa27d6b5847e72

R12G model · FCStd Strength screen CAD audit Stop calculation Replay R12G

VEKTOR E-26 · R12H

Ø28 retainers, struts and mounts

A separate revision was checked. Thrust washers route axial load to the cheeks. Strut sections and paired longitudinal mount webs were revised.

Nominal modeled stable support	7.16 s
Nominal distance from touchdown	107.65 m
Remaining R12G contact witnesses	0
New or increased sampled intersections	0
Minimum frame-fixed clearance	21.1 mm
Strut body neck screen	370 MPa
Isolated mount bending and axial screen	6009 MPa

Stable support is conditional. Nonlinear chassis strength, locking and fatigue life remain on HOLD.

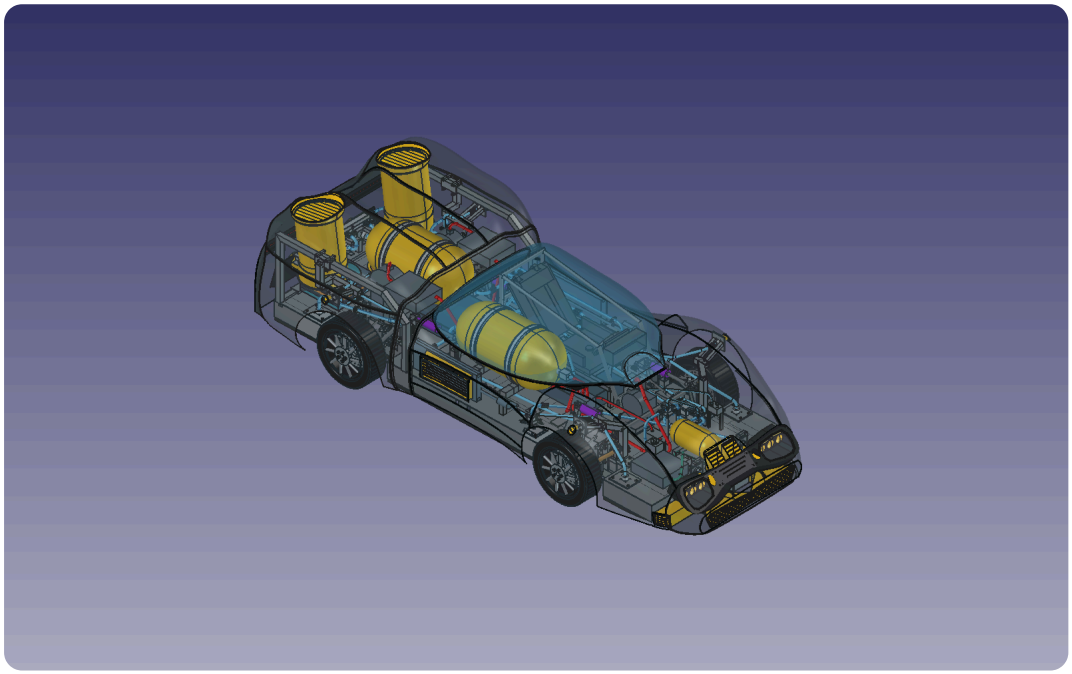

SHA-256 R12H · 363311aa8b9539ec7545ef2da0e96793a1aa29ca5b70ef22393d01664250c757

R12H model · FCStd R12H report Strength screen Open replay