TEXTTOCAD
TEACHING AI TO MAKE THINGS

Left door inner frame

Envelope and geometry for design review

ROADSTER R5 / R10

DEV26 · 21.11.2026

Left side view

X–Z · 1:10

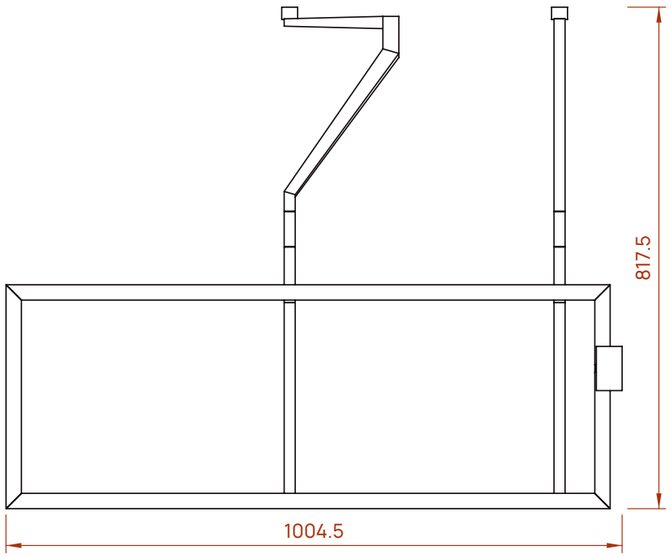

Plan view

X–Y · 1:10

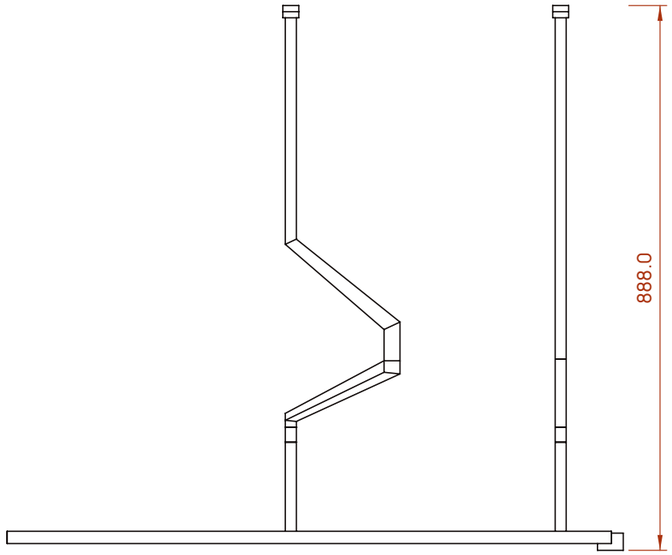

Transverse view from −X

Y–Z · 1:10

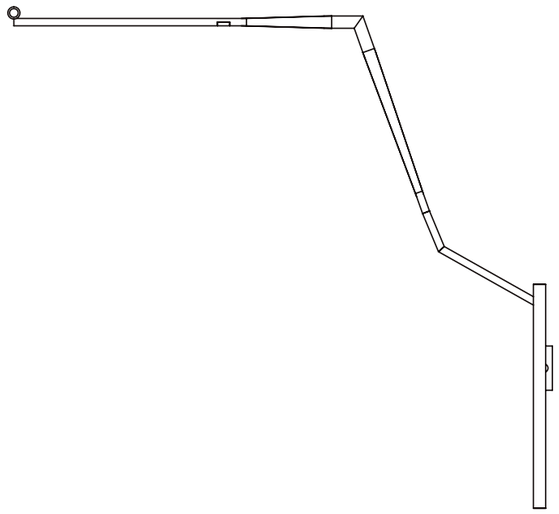

Axonometric view

Overview

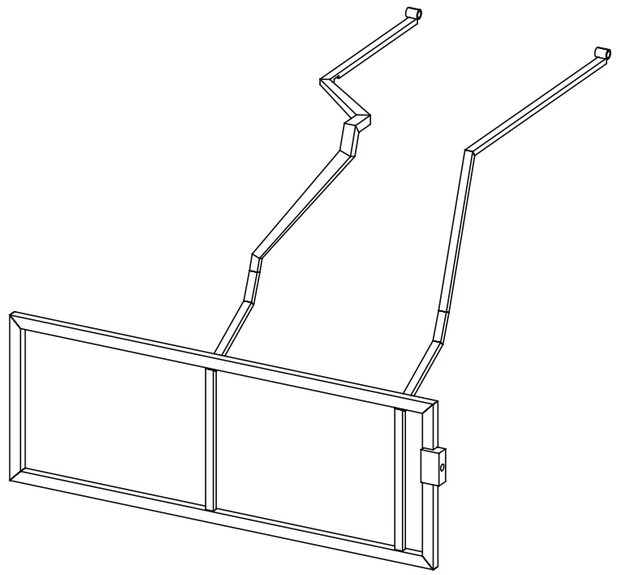

Model data

Native object

DoorLInnerWeldment

STEP import composition

17 solids

Envelope X × Y × Z, mm

1004.5 × 888.0 × 817.5

Source CAD volume, cm³

747.3

Exchange check

Relative volume difference

4.35e-12

Project criterion ≤ 0.000001

Coordinates and dimensions

Reference dimensions in mm.

Original R10 chassis axes.

Nominal closed-door pose.

Review scope

Sheet for packaging review.

Tolerances, welded connections and material remain to be agreed.

SOURCE

RRK_R5_C6I_CAB_R10_RIB_MARGIN.FCStd · SHA-256 ad0f9780…d4fcbd

STEP

RRK_R10_DOOR_L_INNER_FRAME.step

FORMAT / PRINT SCALE

A3 · 100% · texttocad.org