Engineering dossier

Tesla Roadster Rocket · design review edition



Whole vehicle from the archived first-open view of C6I_VIEW, shown at its original revision.

Available for review

The R5 register contains 280 requirements and criteria. The package contains the print register, searchable original specification, two drawing documents, schedules, CAD and bench forms. Each catalogue entry identifies its revision.

What the coupled run established

At the intermediate 2 m N_2 benchmark the front-right wheel took load first and remained the only supporting wheel until the run stopped. A 0.5 s hold on four wheels is open. The 5 m acceptance series has 0 of 4 passes.

Who can use this issue

Design: working R10 geometry and the door review sheet. Test: the pilot test programme and blank records. Project lead: the catalogue and manufacturing release conditions on sheet 4.

Door and structural frame

R10 · front door rib and fixed glass



Left: R10 rib geometry. Right: checked glass interface. Archived FreeCAD views, 19 November 2026.

Selected rib section

26 × 20 × 1.5 mm closed central section, transitioning to the original 18 × 12 mm section.

Door motion

0–100 mm lateral travel and 0–65° rotation. The minimum in 108 exact poses was 2.000 mm. The nominal lower bound over travel was 1.991 mm.

Remaining qualification

Release requires door loads, hinge and latch compliance, assembly tolerances and a residual clearance check. R11 establishes the striker placement corridor.

Included drawings

Variant A provides three assembly sheets, a 33-item parts list and a 63-row joint schedule. M5 documents fixed guides and their section. Update the affected drawings before ordering or manufacturing to R10.

Geometry exchange and internal contacts

An A3 envelope drawing and a STEP file were produced from the saved left frame. Independent import preserved 17 solids with a relative volume difference of 4.35×10^{-12}. Of 136 internal pairs, 19 were in nominal contact. No overlap exceeded the 0.001 mm³ reporting threshold.

R10 FCStd · SHA-256 ad0f9780c79a40038e37333fd26bd27f530ce9a22f97eb224c0ff25010d4fcbd

FL_W0/W1 skirt bench

Fixture scope and test records

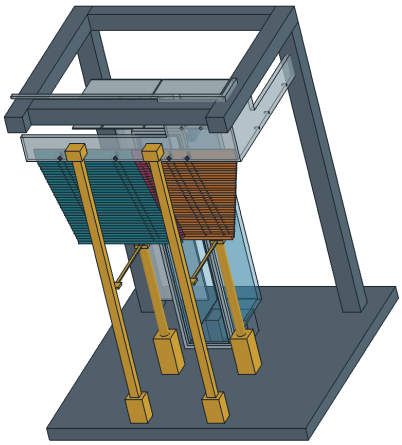

Pilot CAD fixture, archived first-open frame from DEV17.

Specimen and positions

Straight W0/W1 interface. The programme covers equal positions and both signs of a 4.375 mm differential. The W0/S0 corner has its own check.

What to record

Use a common time base for segment positions, baseline and specimen leakage, breakaway and running force, cable tension and residual travel following a fault. Record specimen, calibrations and raw files in the session form.

Evidence status

The conditional digital bench completed a synchronised 128/128 cycle. The programme and physical session form are available. Sealing and retention require measurements from the actual specimen.

Release sequence

Five workstreams and the next deliverable for each

1 Full manoeuvre

Review AIR applicability and tyre and damper data. The 2 m N_2 gate requires four-wheel support, a 0.5 s hold and peak rod speeds ≤1 m/s.

2 Skirts and downforce

Hand the fixture package to the test lead. Obtain calibrated records and relate the measured properties to the four zones.

3 Common configuration

The integrator reconciles geometry, revisions, mass, centre of gravity, energy and cooling on a single assembly. The R08 ledger supplies calculated mass data.

4 Ground chassis

Verify baseline braking and steering, including failure cases. Ground qualification can proceed alongside manoeuvre calculations.

5 Frame and egress

Complete the latch and anchors on the working variant. Link loads, tolerances, load paths and emergency egress to specific drawings and tests.

How to accelerate drawing release

Release by verified subassembly. Design fixes the revision and BOM, manufacturing reviews materials, tolerances, assembly and inspection, and the responsible engineer approves that issue. Other assemblies can be documented in parallel. The complete vehicle requires an integrated assembly, STEP exchange verification, applicable tests and a release decision.

Full manoeuvre · 2 m benchmark

Nitrogen, nominal case · DEV26

Liftoff and contact

Airborne time was 1.7045 s. Net horizontal CG displacement was 0.856 m, including 0.208 m forward and 0.831 m right. Only the front-right wheel carried load over the 29.5 ms from first contact to termination. Four-wheel dwell was 0 s.

Attitude at contact

Contact occurred at 23.26°. The requirement allows 15°. Integrating the recorded body rates reproduces tilt within 0.002°. This checks the numerical signals for consistency.

Effect of recording time

On one unchanged saved trajectory, shifting the observation time by up to 4 ms changes the angle by at most 0.093°. The separate 4 ms and 1 ms integrations differed by 9.56° at contact.

Rod speeds FL / FR / RL / RR

0.24088 / 0.87866 / 0.55647 / 0.53814 m/s over the recorded part of the cycle. The 1 m/s limit applies to each damper throughout the full cycle.

Termination event

Four adjacent channels, CM_FL_S1–S4, exceeded 240 mm/s extension speed. The post-contact termination does not explain the excessive tilt already present in flight.

Next decision

Separate sensitivity to the shared model timestep from sensitivity to control sampling. Landing qualification requires tyre and damper data, synchronised skirt records and a continuous four-wheel hold. All four principal 5 m cases remain open.

TEXTTOCAD
TEACHING AI TO MAKE THINGS

Left door inner frame

Envelope and geometry for design review

ROADSTER R5 / R10

DEV26 · 21.11.2026

Left side view

X–Z · 1:10

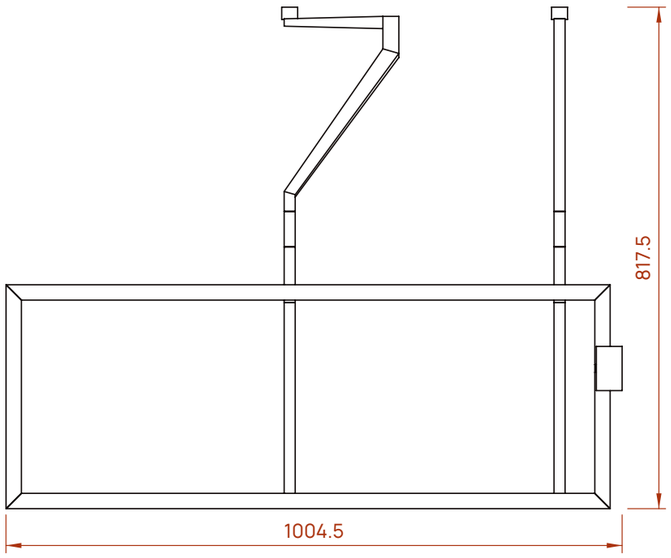

Plan view

X–Y · 1:10

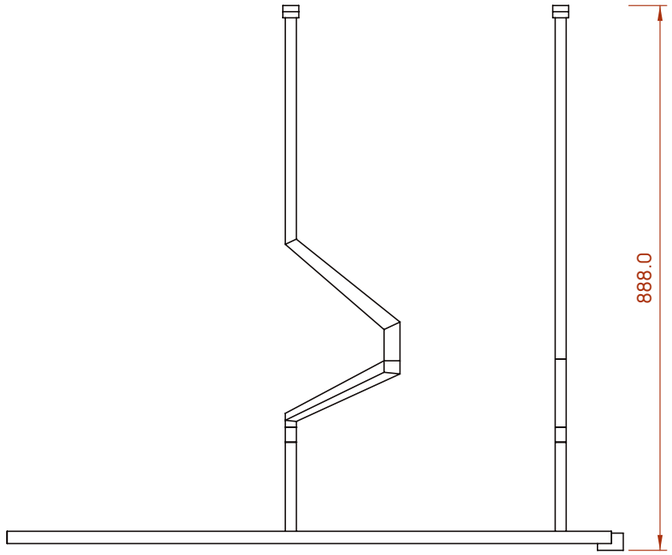

Transverse view from −X

Y–Z · 1:10

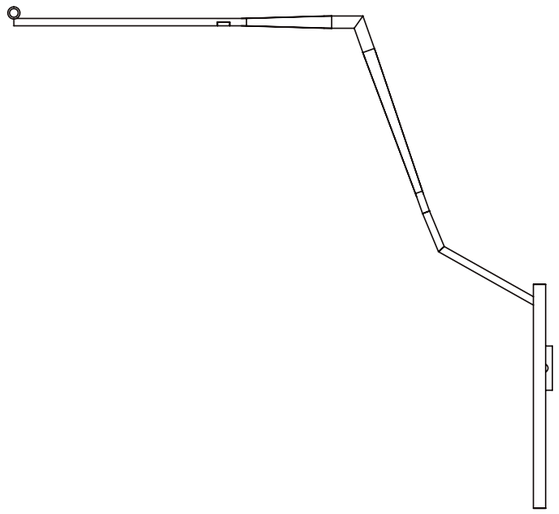

Axonometric view

Overview

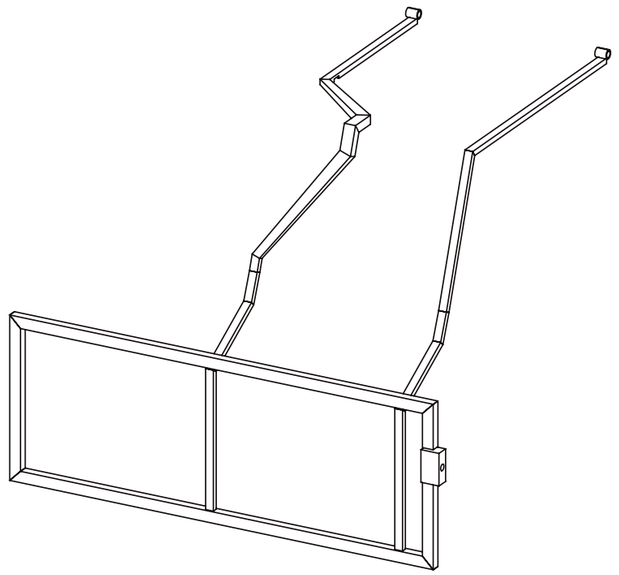

Model data

Native object

DoorLInnerWeldment

STEP import composition

17 solids

Envelope X × Y × Z, mm

1004.5 × 888.0 × 817.5

Source CAD volume, cm³

747.3

Exchange check

Relative volume difference

4.35e-12

Project criterion ≤ 0.000001

Coordinates and dimensions

Reference dimensions in mm.

Original R10 chassis axes.

Nominal closed-door pose.

Review scope

Sheet for packaging review.

Tolerances, welded connections and material remain to be agreed.

SOURCE

RRK_R5_C6I_CAB_R10_RIB_MARGIN.FCStd · SHA-256 ad0f9780…d4fcbd

STEP

RRK_R10_DOOR_L_INNER_FRAME.step

FORMAT / PRINT SCALE

A3 · 100% · texttocad.org

TEXTTOCAD
TEACHING AI TO MAKE THINGS

Door inner frame mass

Two substitutions in the R08 mass ledger

R08 → R10

DEV26 · 21.11.2026

Change for the pair

+45.25 g

Central case. Both saved CAD models assign a design density of 2700 kg/m³ to the door frames.

Values refer to native geometry in the nominal closed-door pose.

Components and calculated material mass

Object	R08, cm³	R10, cm³	R08, kg	R10, kg	Change, g
DoorLInnerWeldment	738.879	747.259	1.994975	2.017599	+22.624
DoorRInnerWeldment	738.879	747.259	1.994975	2.017599	+22.624

Operating mass with driver and fluids, excluding compressed gas

R08 case	Frame factor	Baseline, kg	Change, g	With substitutions, kg
Low	0.90	2 815.852	+40.72	2 815.893
Central	1.00	3 336.703	+45.25	3 336.748
High	1.15	4 137.025	+52.04	4 137.077

Accounting and scope

Exactly two of the 9,038 dry-mass rows were replaced. The 93 allowance rows are already present in the baseline.

The driver and 83 fluid rows were counted once. The weld filler mass for these changes remains open.

The projection holds every other R08 assumption fixed. A complete R10 mass ledger and measured weights remain open.

Skirt measurement record

Pair CM_FL_W0 / CM_FL_W1 · Session and leakage at fixed positions

Session and specimen

Session / date / time

Operator

Cassette and pair ID

Fixture and model revision / SHA

Seal batch / condition

Cable routing, drive, brake / corner boundary

Photo / setup drawing

Sensor IDs and calibration certificates / reference

Shared clock / sample rates, Hz

Zero before / after and uncertainty / attachment

Approved conditions / reference

L · Leakage record

Δq = qW1 − qW0. Extension is positive downwards. Δp = pambient − pchamber.

Mid-stroke reference values of Δq are 0 / +4.375 / −4.375 mm. These are test positions.

RUN_PLAN row ID / replicate no.

Temperature, °C / ambient p, Pa abs.

Averaging window, s

Flow unit and reference temperature / pressure

Reference leak ID

Reading	qW0, mm	qW1, mm	Δp, Pa	Flow Q	Series ID / time
Blank before					
Specimen					
Blank after					

At matched Δp and flow reference conditions, Qspecimen = Qtotal − Qblank.

Applied blank Q / ID

Specimen Q / unit

Expanded uncertainty / k

Use one sheet for one position, one Δp and one replicate. Copy for the next replicate.

Deployment and cable holding

Pair CM_FL_W0 / CM_FL_W1 · One series and one replicate per copy

Session ID / date

RUN_PLAN row / run ID / replicate

Active channel

F · Deployment force

Initial qW0 / qW1, mm

Cable / assistance state

Dwell, s

Breakaway, N

Peak sliding force, N

Sign / direction of travel

Assistance / resistance, N

Margin, N / uncertainty, N / k

H · Holding

Load, N / state / fault ID

Fault / response / arrest times, s

Channel	Excursion, mm	Drift, mm	Creep, mm/s	Tmin / Tmax, N	Spool, °
W0					
W1					

Catcher event / time, s

Recovery / observations

Source files and outcome

Raw CSV / SHA-256 or hashed attachment reference

Synchronized photo / video ID

Run status / reason for interruption

Outcome / criteria reference

Operator / signature / date

Reviewed by / signature / date

Transfer the record to MEASUREMENT_INTAKE.json. TIMESERIES_TEMPLATE.csv defines raw channels.