Sheet 01

Assembly from the cockpit side

The truss, four landing supports, central CF700 and cockpit appear in their saved configuration.

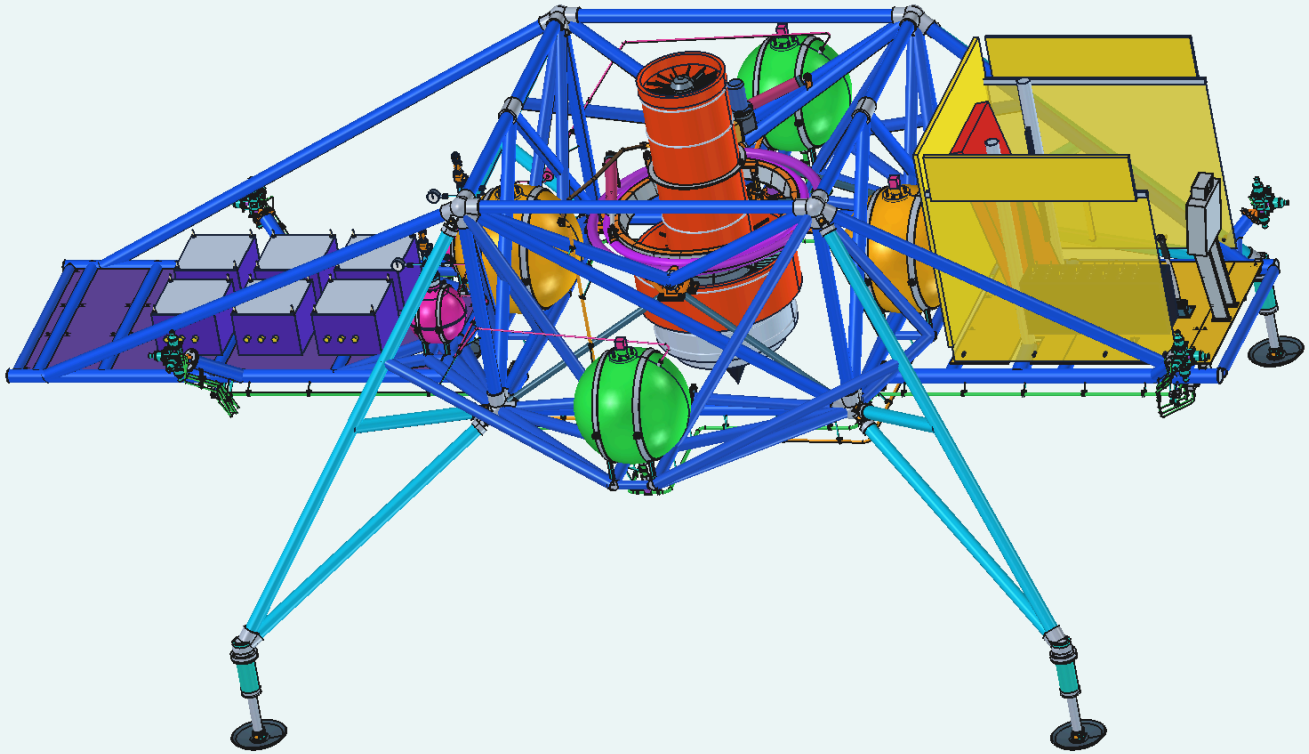

Matched camera and scale on sheets 05, 06 and 01

Sheet 02

Assembly from the avionics side

The opposite view shows the equipment deck, engine envelope and outboard RCS clusters.

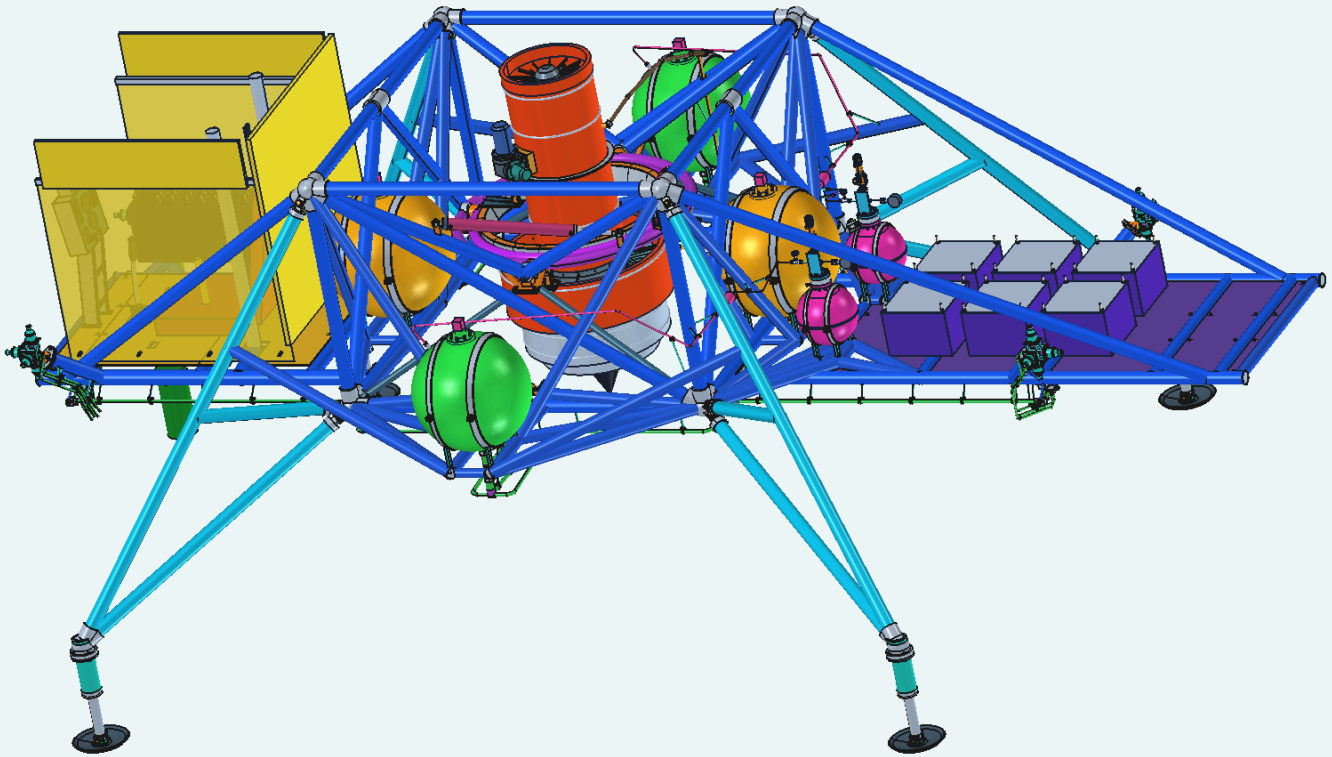

Saved part positions

Sheet 03

Plan view

The tank, pilot and electronics locations are visible relative to the centreline.

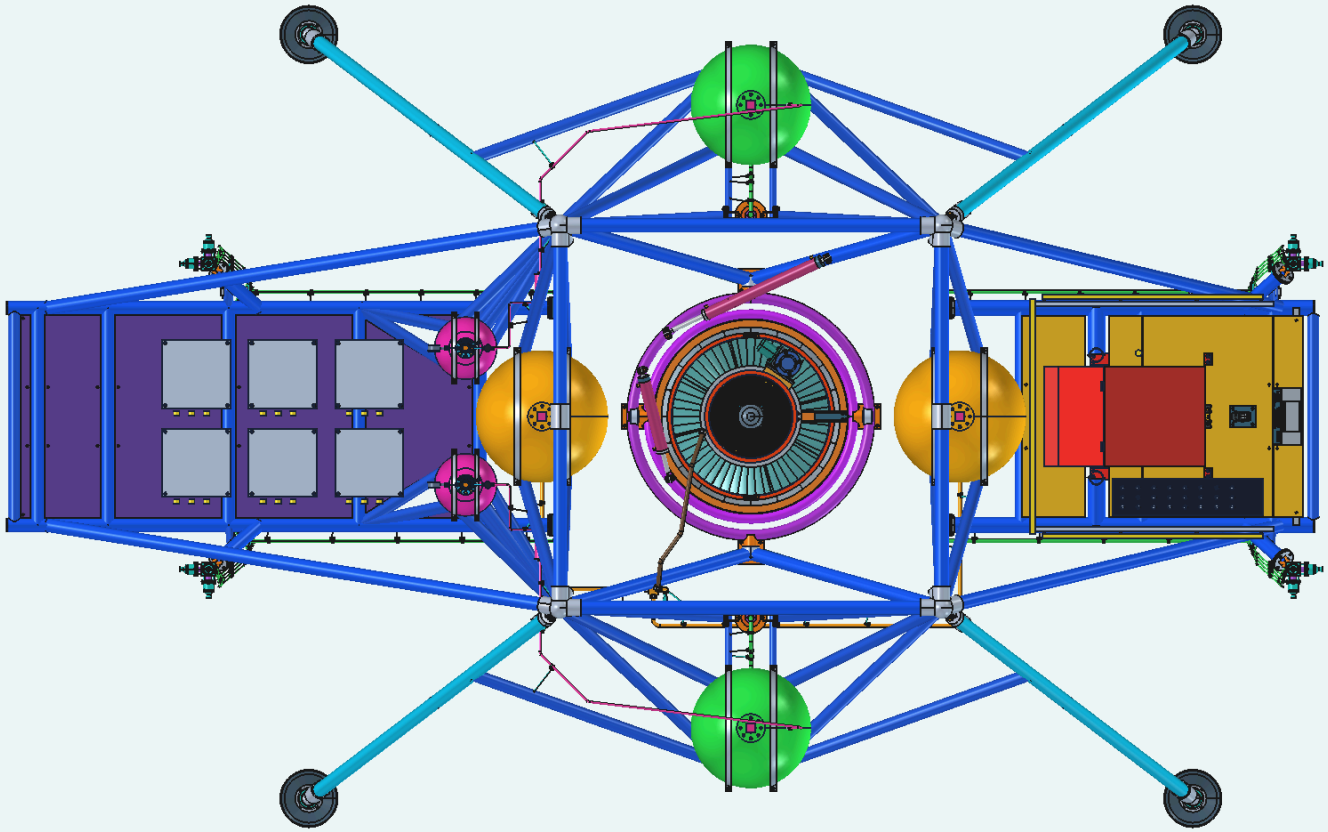

Saved part positions

Sheet 04

Side elevation

The cockpit and engine are shown relative to the truss and landing pads.

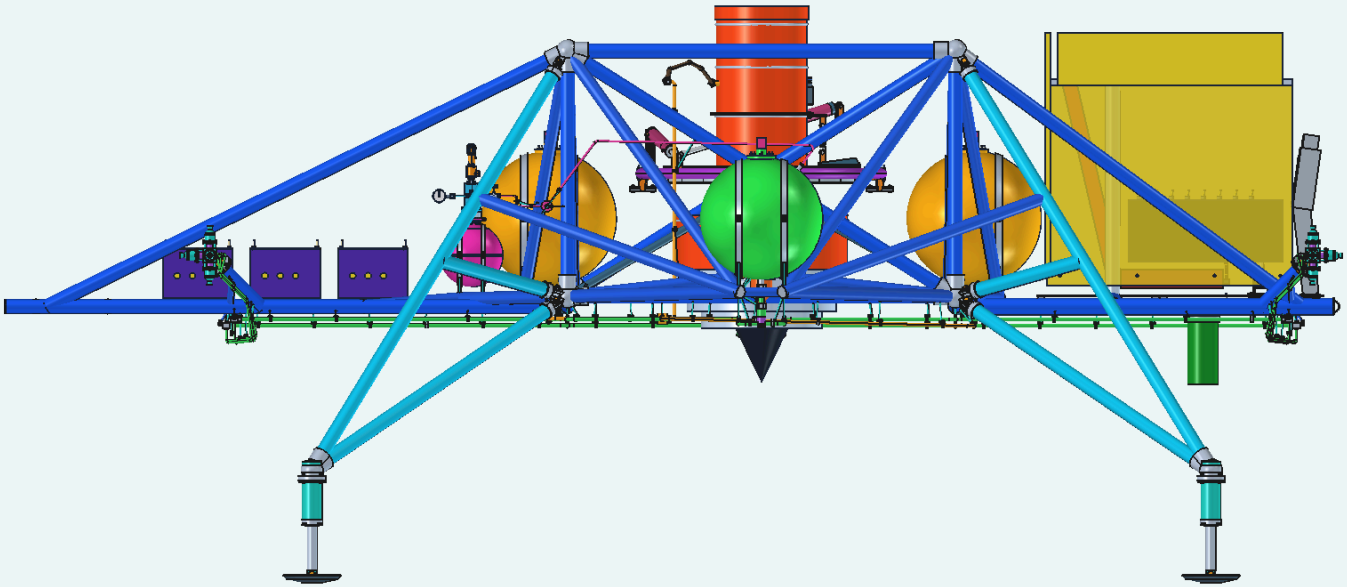

Saved part positions

Sheet 05

Truss and four landing supports

First layout layer. Camera and scale match sheets 06 and 01.

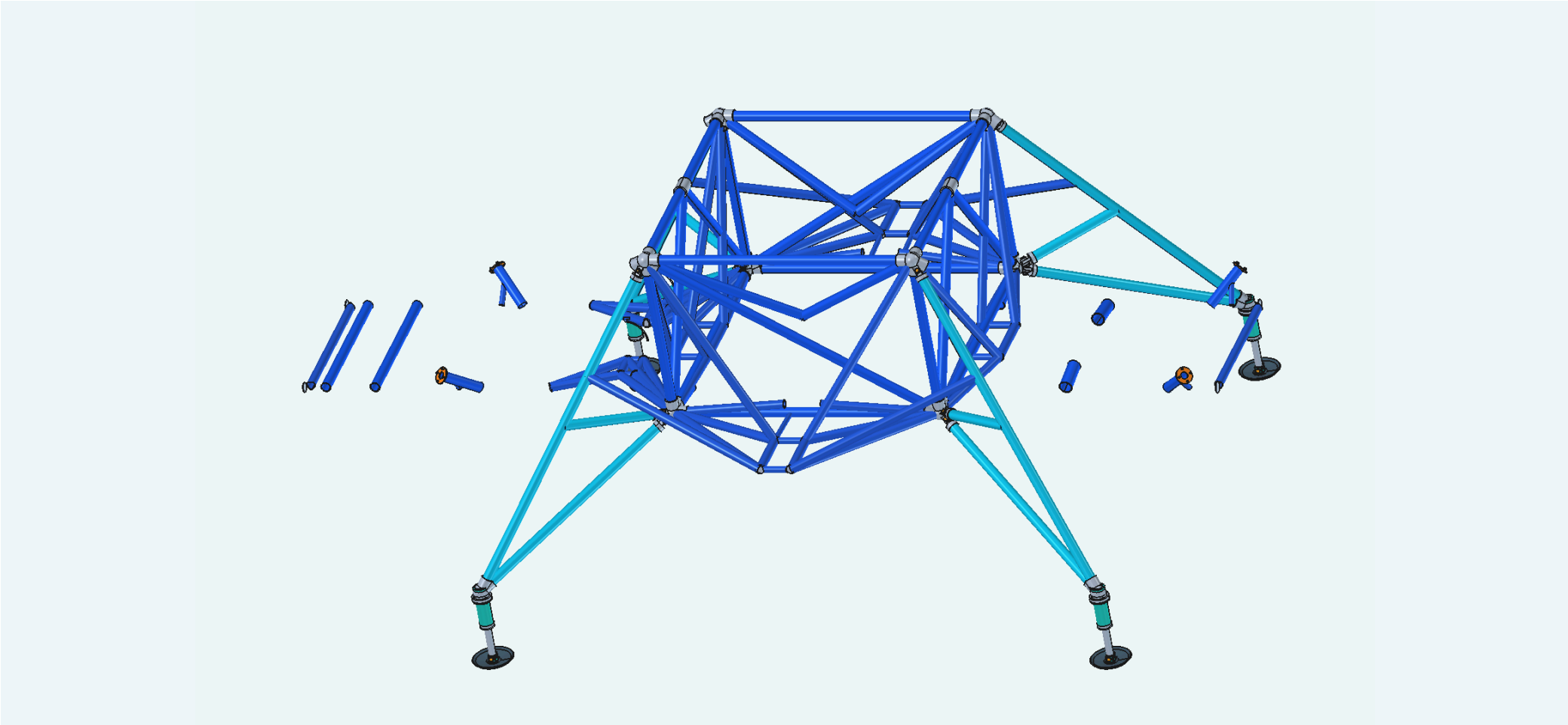

Matched camera and scale on sheets 05, 06 and 01

Sheet 06

Truss with propulsion systems

The same view adds the gimballed CF700, tanks, lift engines and RCS. See sheet 01 for the complete assembly.

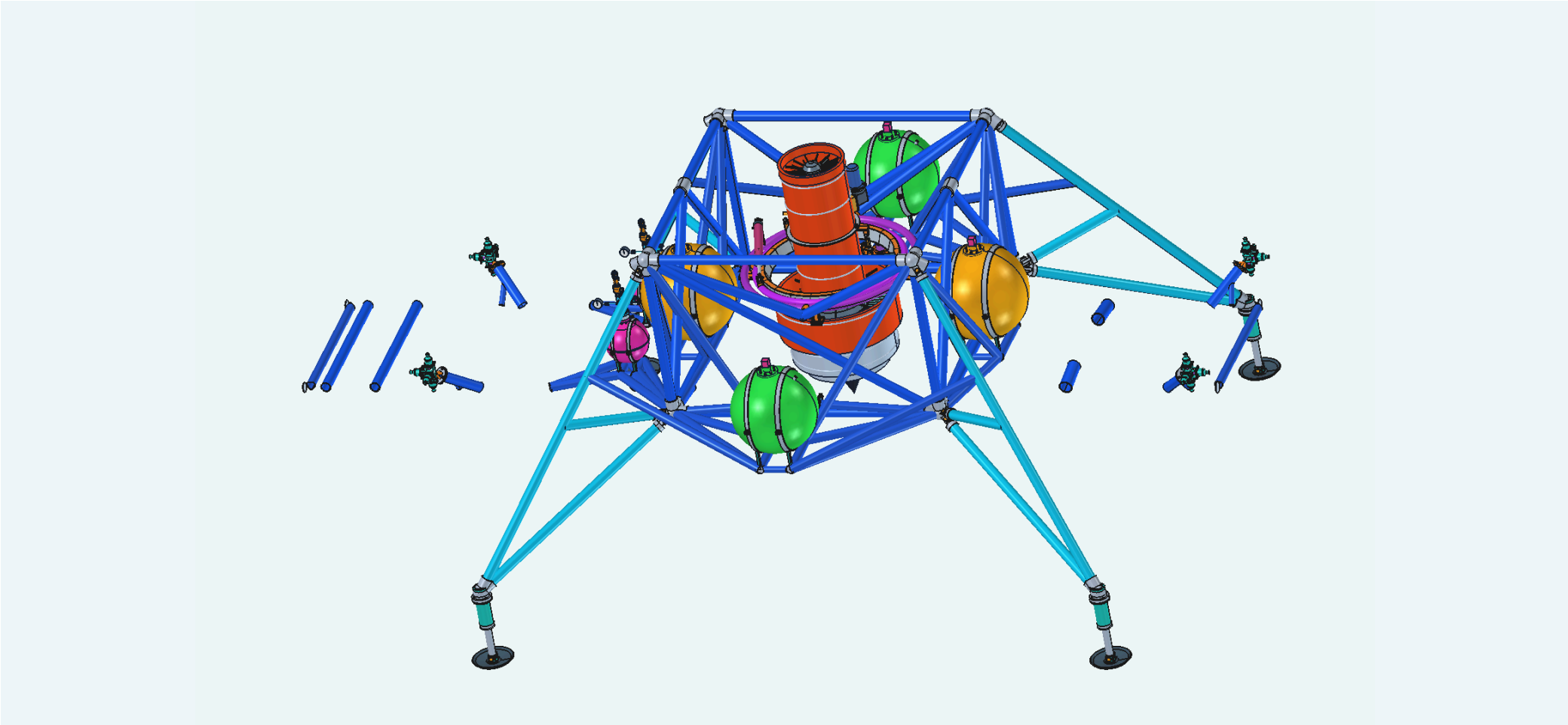

Matched camera and scale on sheets 05, 06 and 01

Sheet 07

Longitudinal section

Y = 0 mm, retaining Y ≤ 0. Orange lines trace intersections of selected bodies with the plane.

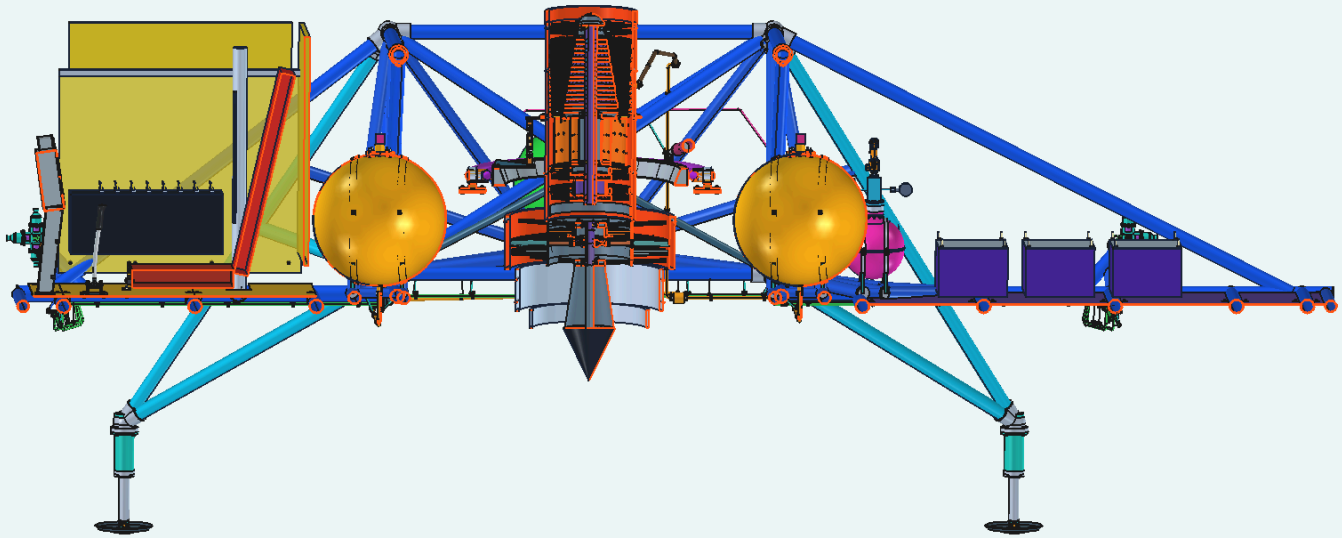

OCC BRep contours · 801 edges in selected bodies

Sheet 08

Transverse section

X = 0 mm, retaining X ≤ 0. The cut passes through the central assembly and shows the transverse layout.

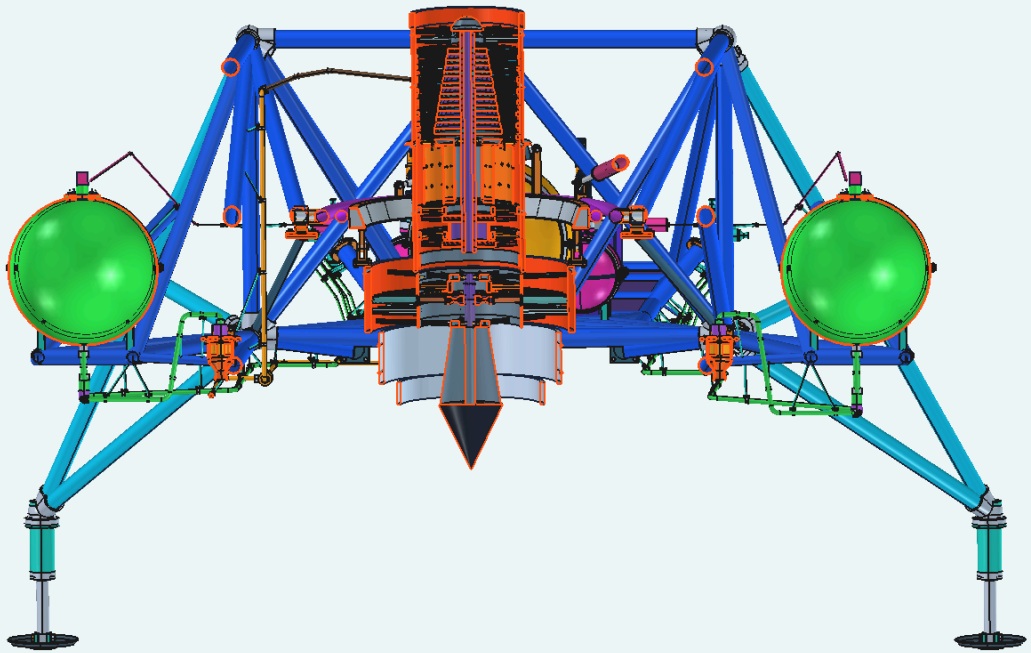

OCC BRep contours · 767 edges in selected bodies

Sheet 09

CF700 and gimbal

The engine is isolated with its gimbal rings. Native part colours and positions are retained.

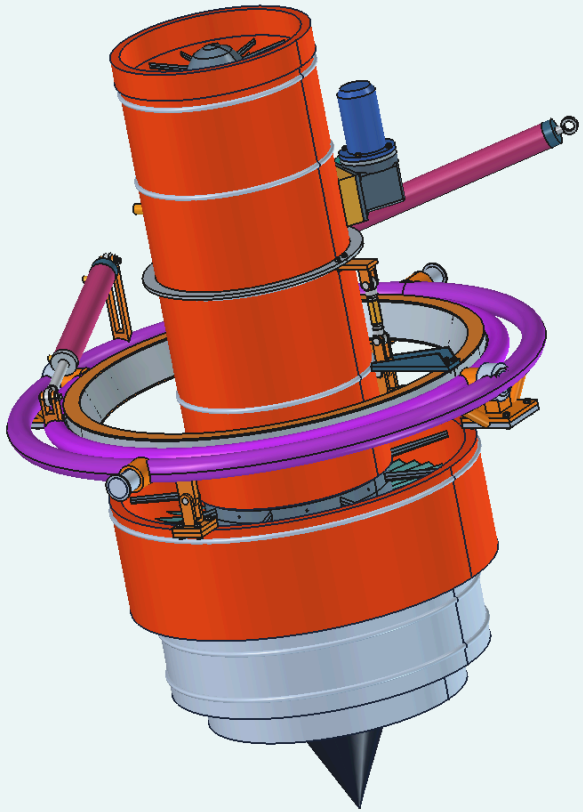

Close-up or isolation

Sheet 09X

CF700 longitudinal section

The Y = 0 mm plane crosses the engine axis to reveal its internal flow paths and rotor arrangement.

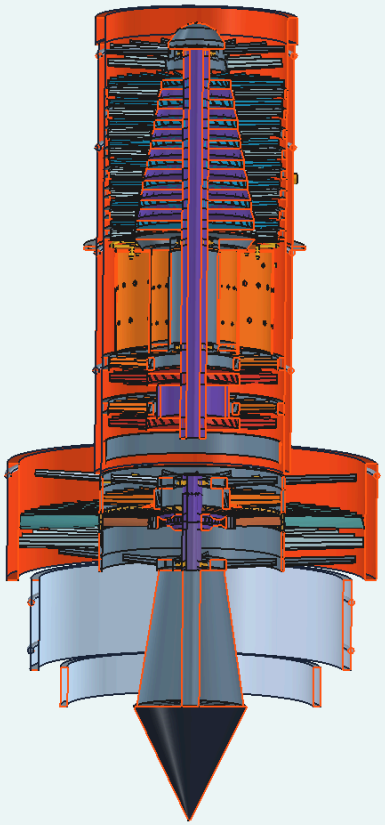

OCC BRep contours · 515 edges in selected bodies

Sheet 10

CF700 rotor group

Rotors, shaft and selected rotating assembly components are isolated from the R4D.1 reconstruction.

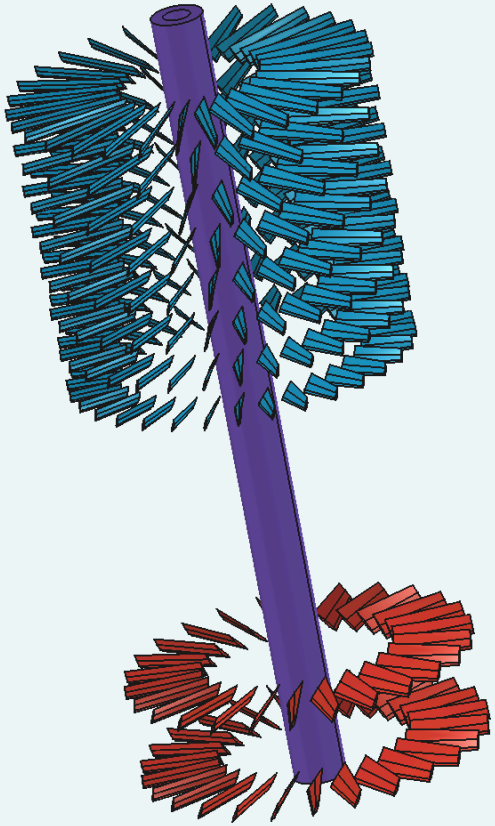

Close-up or isolation

Sheet 11

Tanks and working-fluid routing

The tanks and routing are isolated, including the JP supply and lift-engine feed.

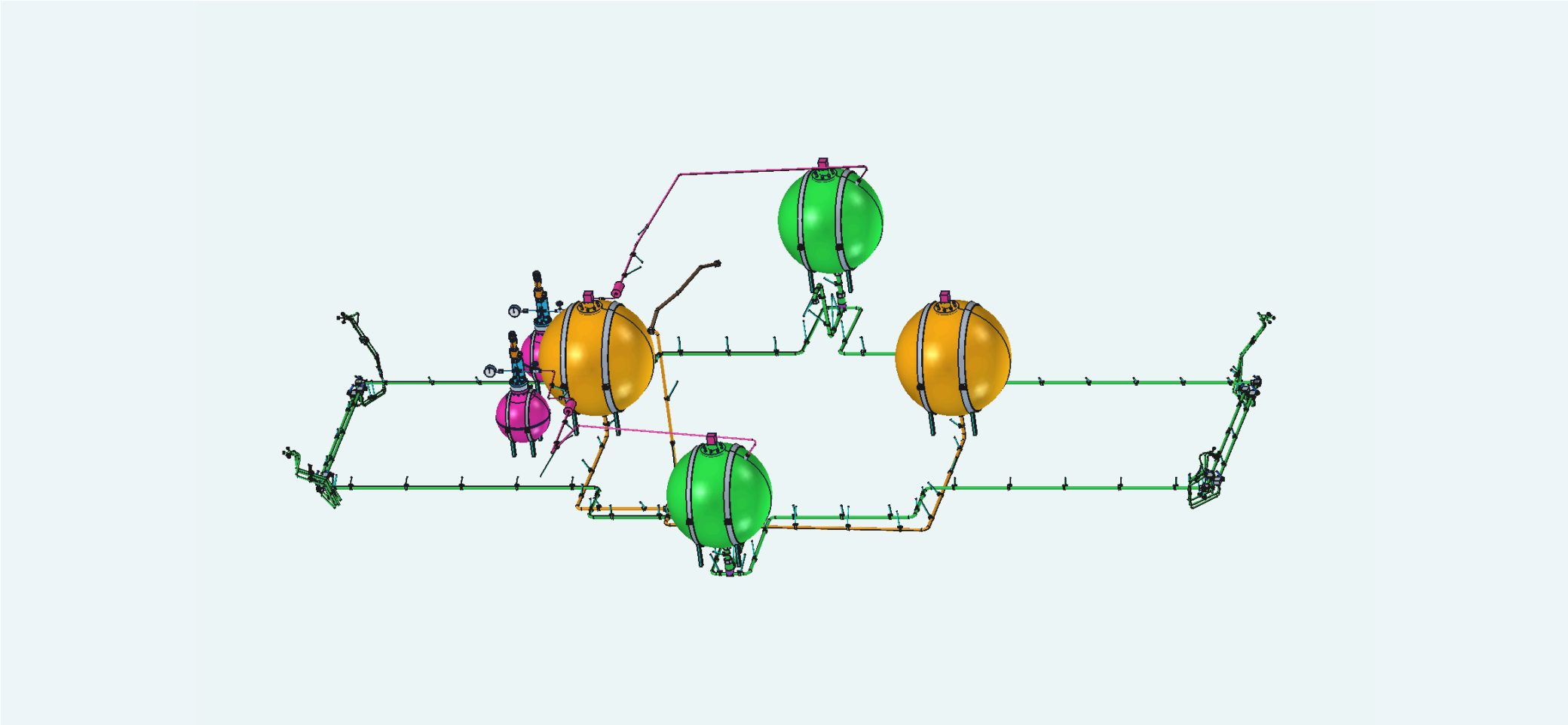

Close-up or isolation

Sheet 12

Lift engines

The two lift assemblies are shown in their installed positions. A close-up of one assembly follows.

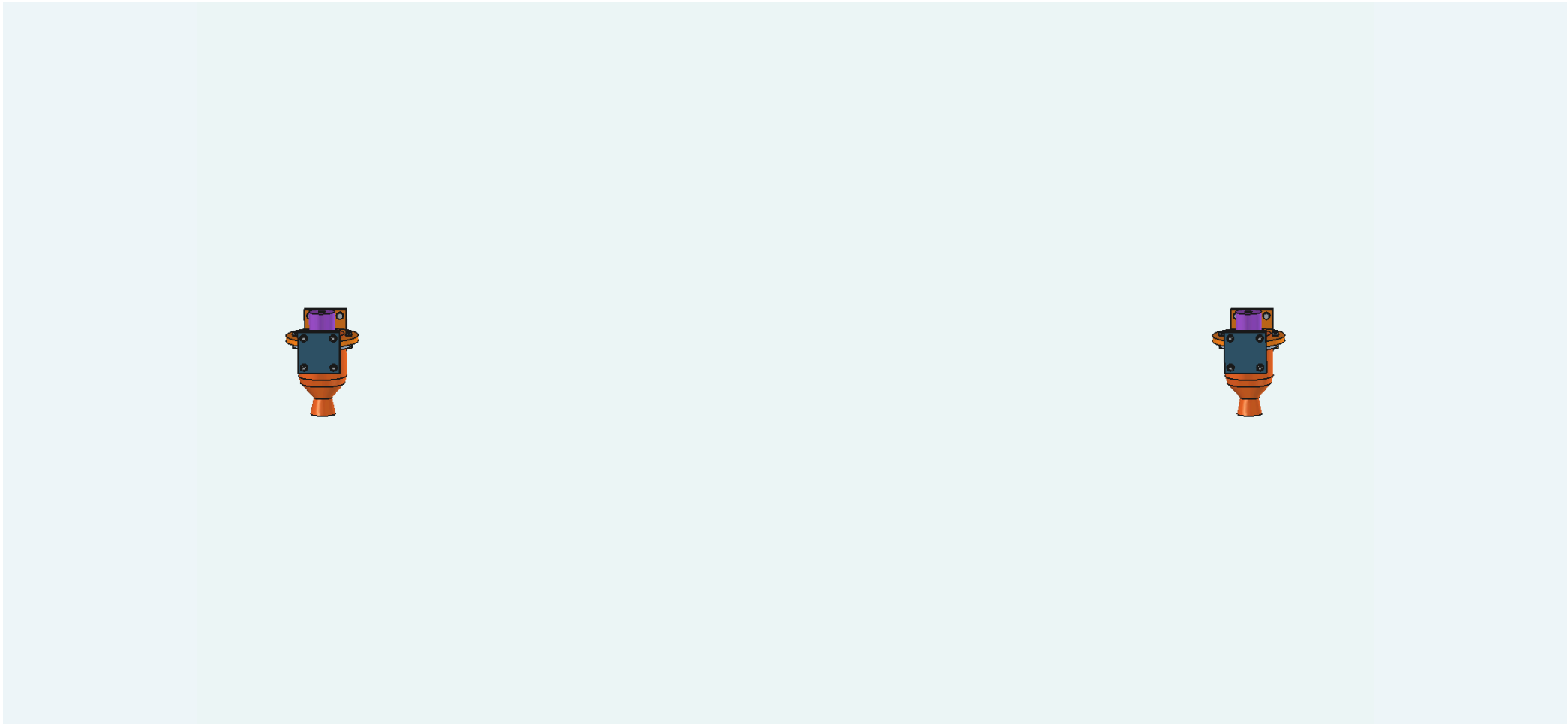

Close-up or isolation

Sheet 12D

Lift assembly close-up

The left lift assembly and its mounting interface are isolated.

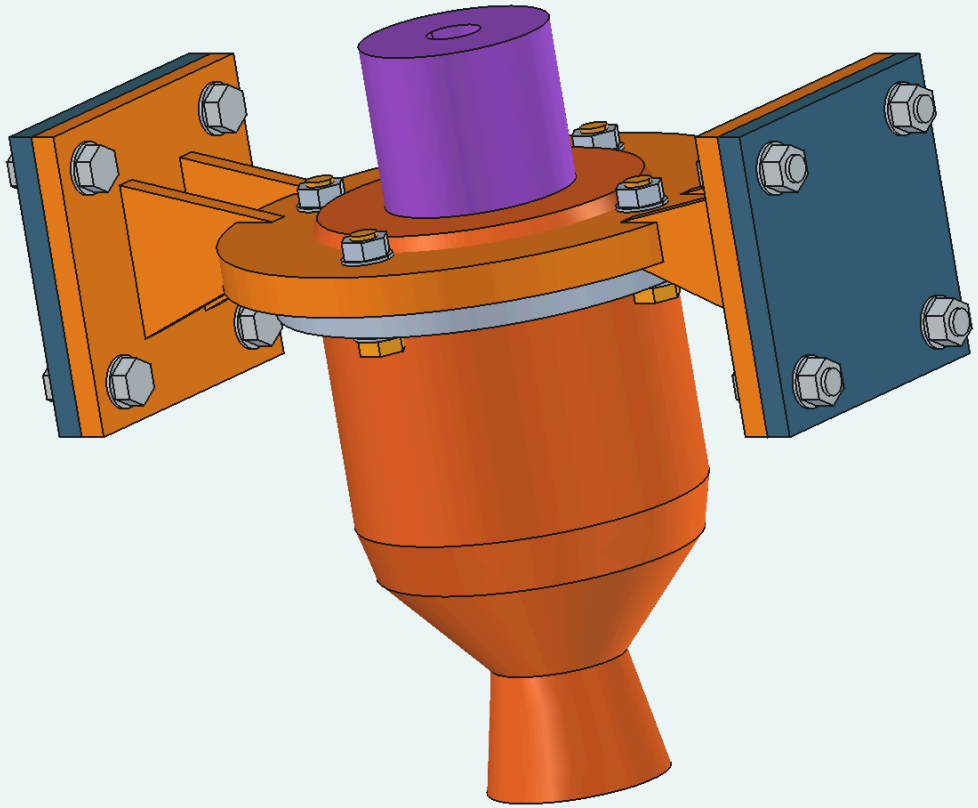

Close-up or isolation

Sheet 13

RCS attitude-control clusters

Relative positions of the four clusters. The detail shows the front-right cluster.

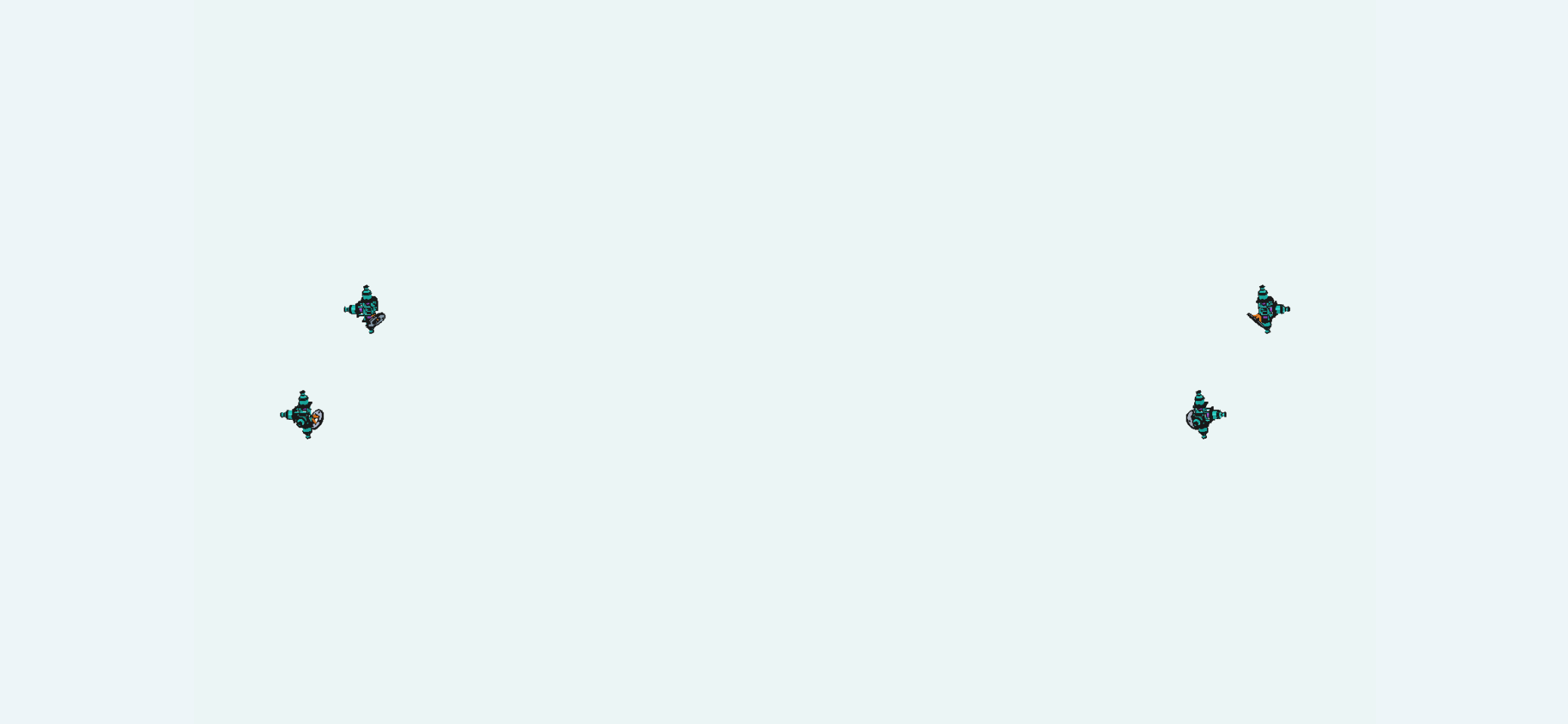

Close-up or isolation

Sheet 13D

Front-right RCS cluster

A close view of the attitude-control chambers and mounting cage in their saved positions.

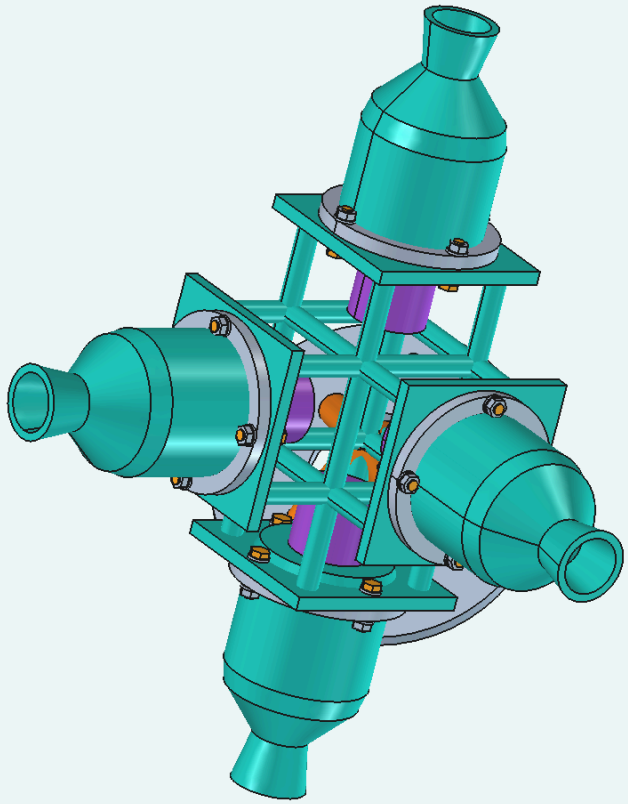

Close-up or isolation

Sheet 14

Cockpit and controls

The pilot station, seat, instrument panel and control stick are isolated.

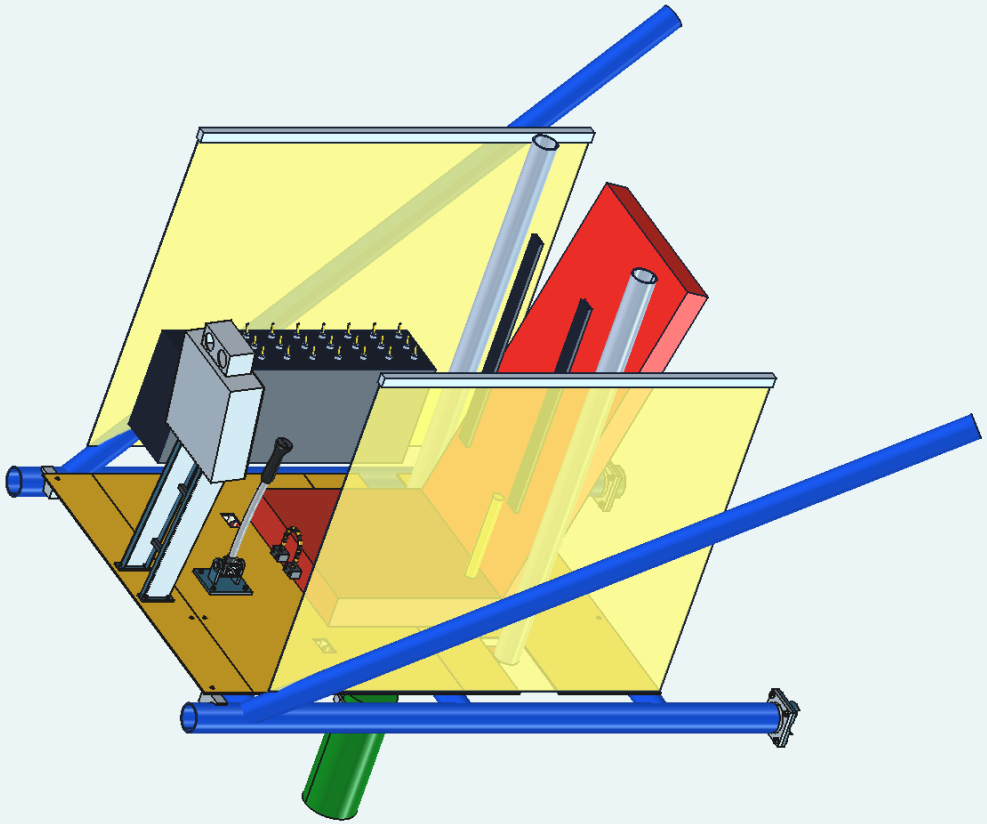

Close-up or isolation

Sheet 15

Avionics deck

A dedicated view of the avionics platform and equipment housings.

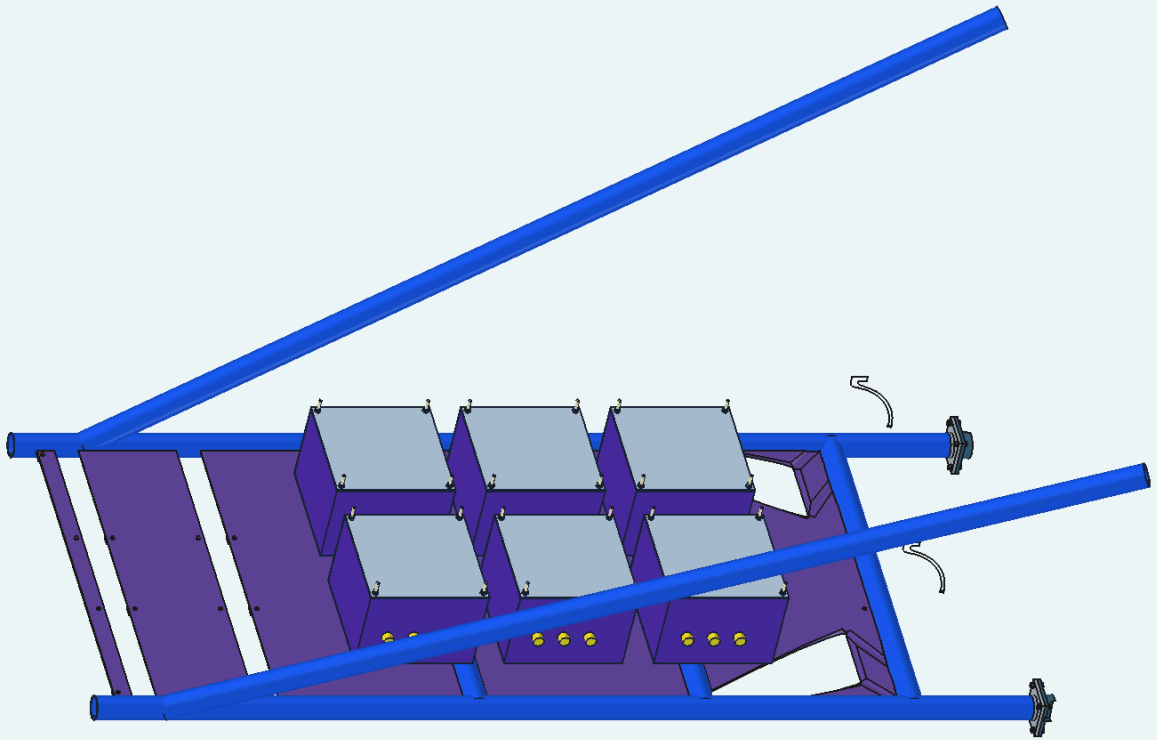

Close-up or isolation

Sheet 16

Landing support close-up

The front-right strut assembly and landing pad are shown in their saved positions.

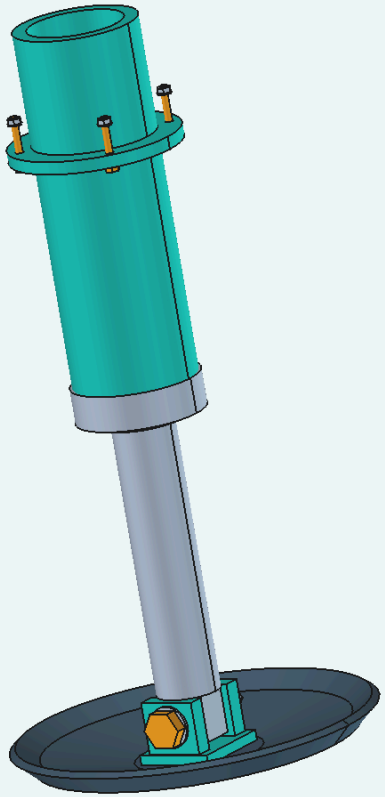

Close-up or isolation

Sheet 28

How does it work?

A guided tour on the LLTV 3D assembly. Start with the whole vehicle or choose a system.

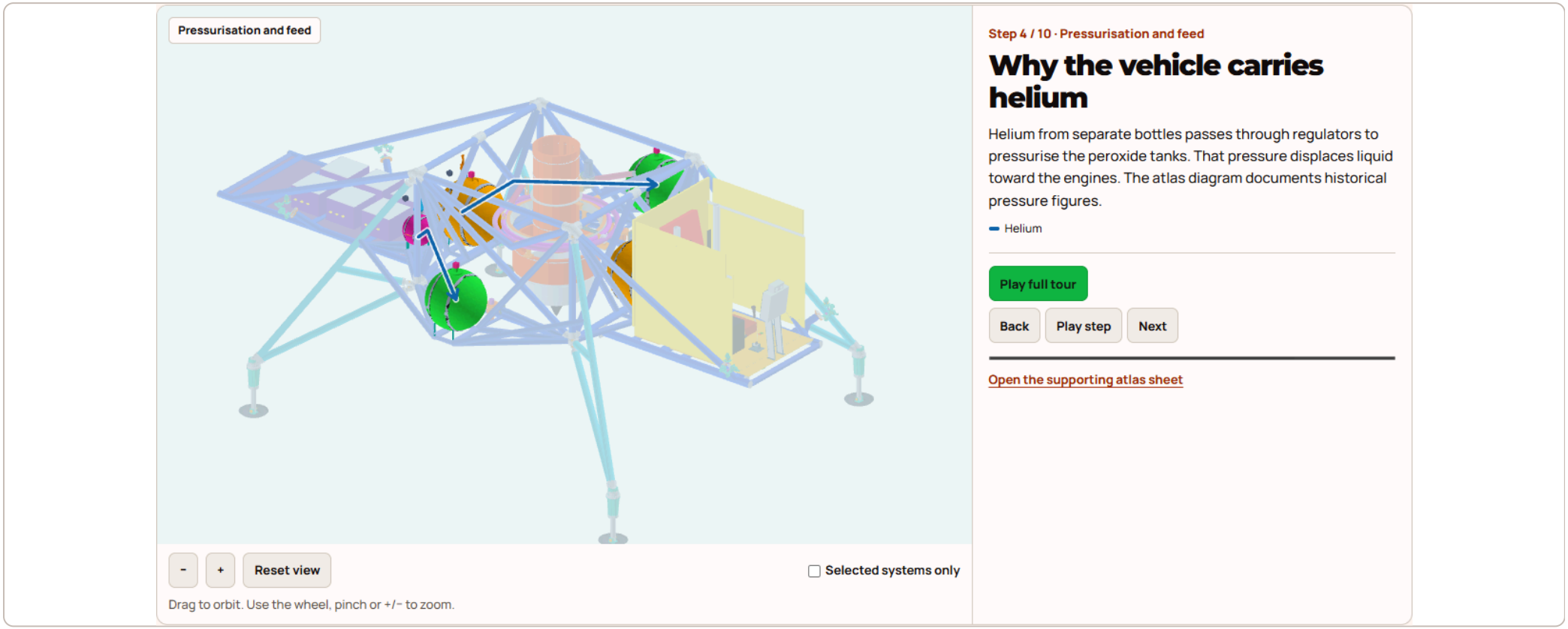

Six chapters and ten steps. Rotate the assembly, highlight the selected systems and trace flows, commands and forces. Each step links to the supporting atlas sheet.

Sheet 00

First open in FreeCAD

Camera and visibility come from the file. A separate process captured the view before any camera or visibility changes.



Saved part positions

Sheet 17

Mass, centre of mass and inertia

Mass properties use R4D.1 solids, assumed densities and modelled consumables.

Configuration	Mass, kg	CoM X / Y / Z, CAD mm	Principal moments, kg·m²
Vehicle without pilot	1 173.77	-126.9 / -1.8 / -283.1	952.8 / 2 763.1 / 3 066.3
With pilot, unfilled	1 252.77	4.7 / -1.7 / -265.2	957.1 / 3 093.4 / 3 394.1
Partial fill	1 510.81	3.2 / -1.4 / -278.4	1 315.8 / 3 222.9 / 3 876.3
Full modelled load	1 768.07	2.7 / -1.2 / -256.0	1 678.4 / 3 354.9 / 4 357.7

Neutral gimbal pose and CAD Z up. The estimate includes a 79 kg pilot assumption. Mass and inertia come from the model; independent weighing is pending.

Mass register and full tensor

Sheet 18

Flight and landing reserve

Examples from reproducible 6DoF scenarios for the single R4D.1 model.

Scenario	Airborne, s	Landing offset, m	Excess over reserve, kg JP / H_2O_2
Translation up to 1 m/s, calm	97.76	67.0	184.99 / 1.02
3 m/s, calm, go-around	92.76	87.0	185.35 / 2.07
3 m/s, 2 m/s headwind, go-around	94.75	47.0	184.86 / 0.20
Crosswind gusts to 3.5 m/s with circuit	86.74	16.5	185.54 / 1.29



Range is the landing offset. The total horizontal track in the gust-and-circuit case is 32.3 m. Reserve is evaluated at descent start or at first approach, depending on the case.

Open the scenario in the 3D replay · Numerical record · Technical video (RU)

Sheet 19

Historical data and reconstruction

Archived LLRV results inform the R4D.1 model. Dedicated synchronized telemetry is needed for NASA 952.

Data	Scope	Source
NASA 952	Historical sources confirm the CF700-2V and gimbal.	PHO-TR474
LLRV gimbal ground test	0.4 s rise time in the closed-loop test.	NASA TN D-3689, Fig. 16
LLRV lift and control	Historical engine data, with calibration pending for R4D.1 transients.	NASA TN D-3023, Table IV
R4D.1 simulation	6DoF, assumed aerodynamics and discrete ground contact. Actual-flight accuracy remains undetermined.	mission_summary.json

Sheet 20

Requirements and verification

Status against the simulation work plan, with the applicable scope of CAD and numerical results.

Work-plan item	Check	Current result and remaining work
T01 / T19	Configuration, axes and geometry provenance	Assembly, SHA-256 and first-open image.
T08	Mass properties	Native estimate complete. Weighing, inertia and centre-of-mass validation are open.
T06 / T07 / T12	Actuator dynamics	Historical benchmarks collected. Independent identification of response and limits remains open.
T08 / T04 / T11	Closed-loop flight model	Full mission, wind and go-arounds can be replayed. Measurement and independent telemetry validation remain open.

Requirements and simulation work plan · Shot map, required parts and SHA-256

Sheet 21

CF700 component studies

Archived engine architecture and verification studies from the same revision.

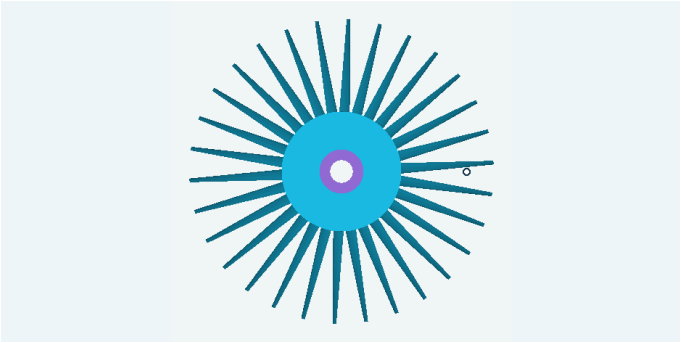

Core axial arrangement

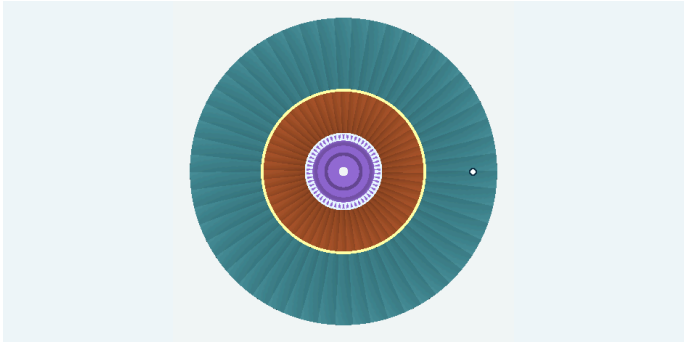

Fan axial arrangement



Blade and slot · archive (RU)

The archived check records 154 engine features and 135 valid section objects. The source register books the engine as a 285 kg equivalent mass.

Archived CF700 interactive study (RU) · Detailed CAD cutaway · Verification record

Sheet 22

Manoeuvres and propellant usage

Selected numerical scenarios from the original propellant study.

Simulated scenario	Total cycle, s	JP, kg	H_2O_2, kg
Takeoff and landing in place	43	9.389	99.245
10 s extra hover	53	12.007	127.735
360° yaw turn	78	18.343	197.076
8 m translation	47	10.438	112.087
Translation, climb and 30° turn	57	13.037	140.037

Duration and propellant usage cover the whole cycle, including the portion on the ground. The 360° simulated turn is about the yaw axis.

Phase CSV · Manoeuvre CSV

Sheet 23

Project evidence and references

A single index for numerical benchmarks, geometric checks and manufacturing estimates.

Package	Contents	Files
Numerical test bench	Test programme and reproducible numerical benchmarks, including NASA NESC. Scope is tied to the archived assumptions.	Programme (RU) · NESC
CF700 geometry and CAD exchange	Neutral-pose geometry intersection check and STEP round-trip record.	CAD · AP242
Working fluids	Dated report with JP and H_2O_2 usage by phase and manoeuvre.	Report (RU)
Manufacturing and development	Archived cost comparison with its original assumptions. The layout sheets cover LLTV.	CSV · JSON

Sheet 24

Peroxide feed and pressurization

Select a component on the functional diagram.

Helium bottles

4 000 psig

≈ 276 bar gauge · nominal LLTV charge

Regulator

495 psig

≈ 34.1 bar gauge · LLTV regulator outlet

H_2O_2 tanks

≈ 34.1 bar gauge

Nominal regulated tank pressurization

Engine feed

—

Depends on flow and operating condition

Lift engines

325 psia

≈ 22.4 bar absolute · LLRV chamber at maximum thrust

RCS thrusters

319 psia

≈ 22.0 bar absolute · LLRV chamber at maximum thrust

Helium → H_2O_2 tank pressurization → liquid peroxide → lift engines and RCS

> Helium supplied pressure to displace liquid from the tanks.

Functional diagram. Bell documents LLTV pressurization. Chamber figures come from the earlier LLRV. Individual line pressures on NASA 952 are unverified. psig is gauge pressure; psia is absolute pressure.

NASA TN D-3023, Table IV · Pressure source notes

Sheet 25

Lift engine and RCS in 3D

Orbit the schematic cutaway, trace the flow or fire a pulse and compare rotation axes.



Liquid peroxide · Catalyst bed · Steam and oxygen

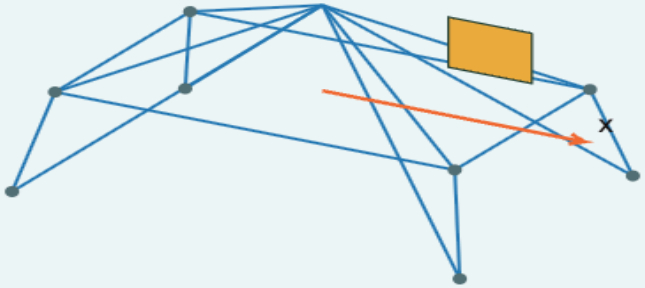

Select an axis and fire a pulse.

Educational cutaways use illustrative geometry. The arrows show an illustrative force couple, torque direction and the rotation axis.

Bell CAD view · RCS cluster CAD view

Sheet 26

Peroxide and helium costs

Full load and replenishment after a simulated flight in Russia, the US and the EU.

Full cycle 43 s · airborne 31.74 s

Share of full H_2O_2 load used per flight **34.5%**

Item	Full load	Flight replenishment
H_2O_2 90%	291.9 kg · No price	100.81 kg · No price
Helium	4.312 normal m³ · 22,695.61 ₽	Volume unmeasured
Total	**22,695.61 ₽ · known subtotal**	—

Russia · 40 L cylinder quote and 5.7 m³ nominal free-gas volume.

Each material cost is its quantity times its unit price. Filling services, cylinders and delivery are excluded. Normal cubic metres use 0 °C and 101.325 kPa. **Data and assumptions**

Sheet 27

Peroxide use in the 3D replay

Play the flight or select a phase. The feed diagram and consumption follow the timeline.

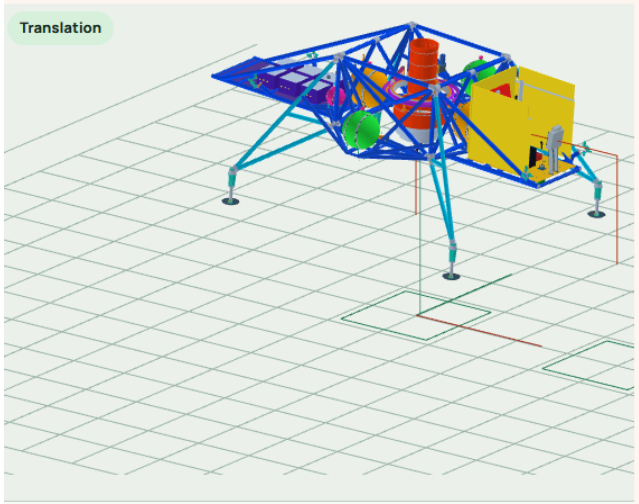

Phase	Interval, s	Bell / RCS active, s	H_2O_2, kg	Russia, RUB	US, USD	EU, EUR
Ground start	0–3	2.91 / 2.74	7.75	3,873.49	77.47	92.96
Climb	3–8	5 / 5	15.11	7,556.12	151.12	181.35
Hover	8–11	3 / 3	8.58	4,288.17	85.76	102.92
Translation	11–20	9 / 9	26.52	13,262.3	265.25	318.3
Hover over target	20–23	3 / 3	8.77	4,382.95	87.66	105.19
Descent	23–31	8 / 8	22.06	11,030.9	220.62	264.74
Flare	31–34.56	3.56 / 3.56	9.44	4,719.49	94.39	113.27
Touchdown and settling	34.56–40.94	2.54 / 2.55	2.58	1,289.89	25.8	30.96
Parked on supports	40.94–43	0 / 0	0	0	0	0
Recording total			**100.81**	**50,403.3**	**1,008.07**	**1,209.68**

Baseline scenario. Illustrative rates: 500 RUB/kg, 10 USD/kg and 12 EUR/kg.

Active time counts simulated group thrust above 1 N. Bell and RCS can overlap. The recording has one H_2O_2 mass for both groups. Phase use is the decrease in solution mass in the tanks. Cost is usage times the market rate. Helium is calculated separately on sheet 26.

Phases use the labels in the simulation record. The diagram shows branch activity based on thrust. Sheet 24 pressure values come from historical sources. Checks and source data