ENGINEERING ATLAS · R6E5

SNECMA C.400 P.2

Atar Volant. A digital reconstruction of the experimental vertical take-off and landing aircraft.

Wheel diagonal

5250 mm

Engine

Atar 101 D.V

Landing legs

4

R6E5 5250 assembly · native FreeCAD capture



Three-quarter assembly view

Assembly view from the saved FreeCAD model. Component colours come from the native file.

DIMENSIONS · ORTHOGRAPHIC VIEWS

Silhouette and wheel footprint

The engine sits on the vertical axis. The open pilot station is above the intake and four legs spread the footprint at ground level.



Side elevation

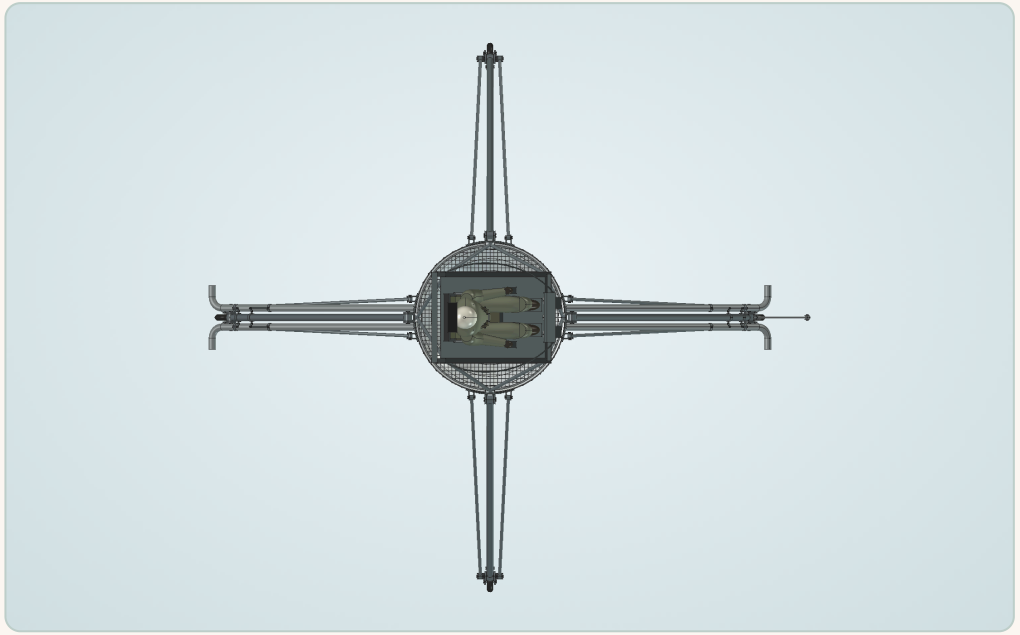

Top view

Overall height	Fairing diameter	Wheel diagonal
8340 mm	**1500 mm**	**5250 mm**

- The dimensions were published for the historical P.2. Measurement datums and the exact configuration on the first free-flight date remain open.

NATIVE VIEW · ISOLATED SYSTEMS

Pilot station above the intake

The seat, instrument panel, both control grips, platform and engine intake screen appear in one view.

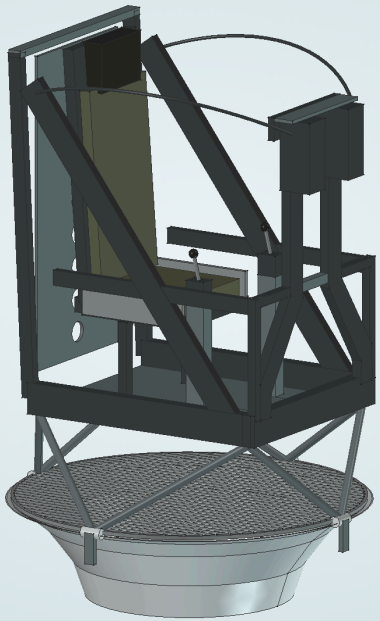

Station with pilot figure hidden

Seat
Open seat above the engine inlet

Controls
Two grips and an instrument panel

Inlet
Annular intake with a protective screen

The historical source identifies the SNCASO E-120 A seat. Its layout and internal features are reconstructed from the available evidence.

NATIVE VIEWS · ASSEMBLY AND DETAIL

Four legs and the touchdown probe

The gear view shows the relationship between struts, stays and lower joints. The detail view shows the castoring wheel of one leg.



Four legs and probe



Leg A · strut, stays and wheel

- The probe is a separate assembly in CAD. The P1 flight model calculates supporting reactions at the four wheels.

NATIVE VIEWS · INSTALLATION

Annular tank around the engine

The tank sits inside the fairing around the engine casing. With the fairing hidden, the frame rings, tank and collector beneath it are visible.

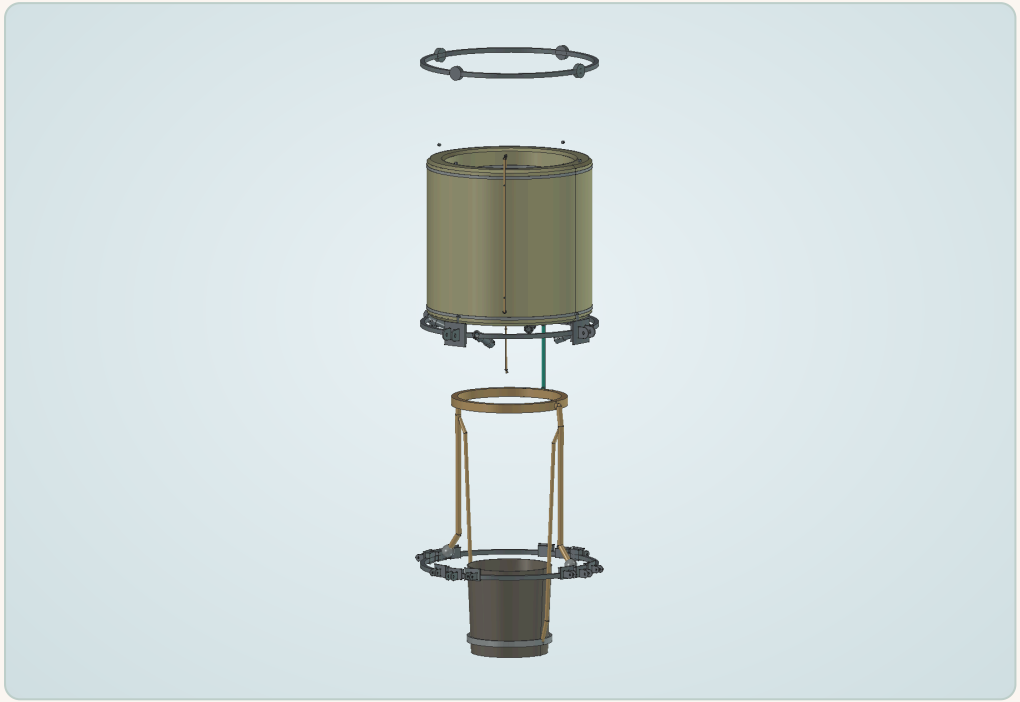

Frame rings and internal systems

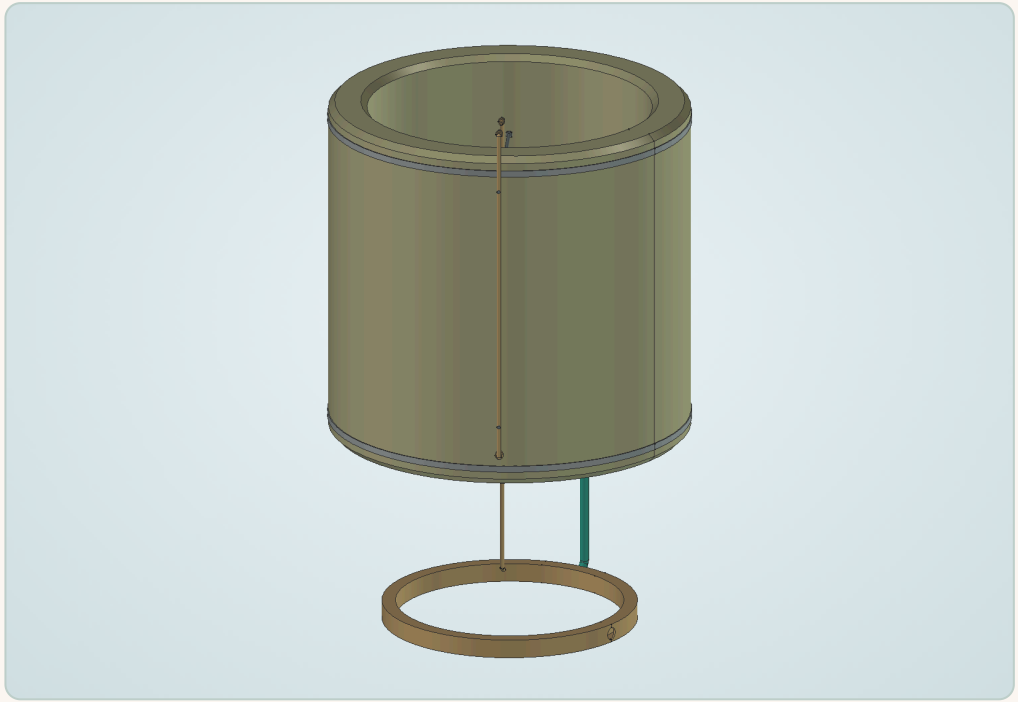

Tank, C3 line and collector

- The historical account gives about 500 kg of kerosene. Usable capacity and unusable fuel require measurement and fuel-system testing.

NATIVE SECTION · R6E1 ENGINE

Atar 101 D.V in longitudinal section

Air flows from top to bottom. The cutaway shows the intake, seven compressor stages, annular combustor, single turbine stage and jetpipe in sequence.

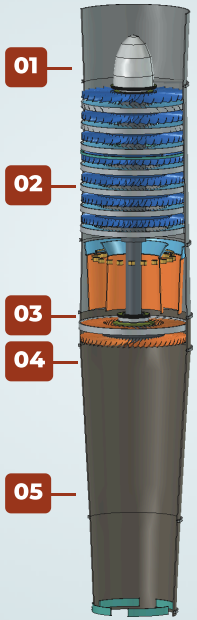

Complete longitudinal section

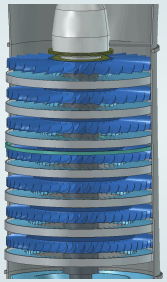

Cold section · compressor

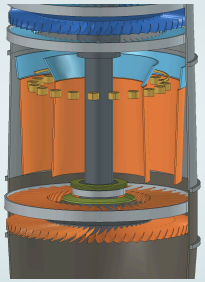

Hot section · combustor and turbine

01 Intake and rotor centrebody

02 Seven axial compressor stages

03 Annular combustion chamber

04 Single-stage turbine

05 Jetpipe and outlet

Plane Y = 0 mm in engine coordinates. Selected casings are opened along the axis and the rotor is shown whole. The C3 sheet shows the R6E5 joint.

R6E5 · SECTION ON THE 95° MERIDIAN

C3 duct to the collector

The section shows the takeoff behind the third-stage stator, the route between compressor and tank, and the joint to the annular collector.

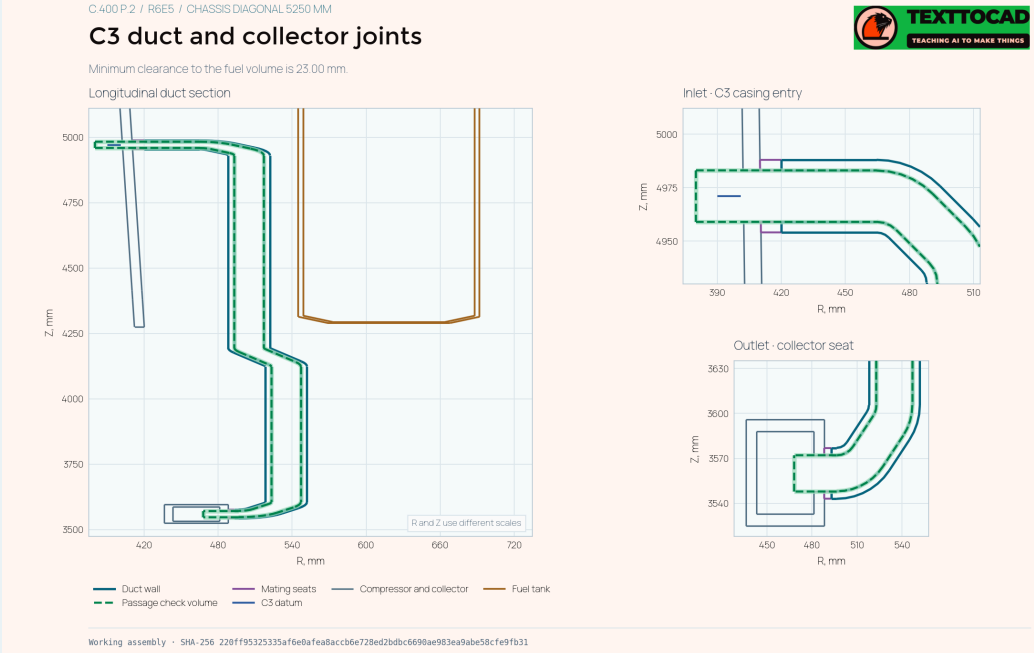

Route and two enlarged joints

Fuel-volume clearance
23.00 mm

Bore diameter
Ø24 mm

Bore area · 14 sections
452.39 mm²

- The clearance applies to the saved geometry. Leak tightness, loads, thermal expansion and flow through the duct require separate checks.

NATIVE VIEW · PNEUMATIC SYSTEM

Bleed air and thrust control

The main jet provides lift. Bleed air passes through the collector to the control branches, including sector injection and roll pipes.

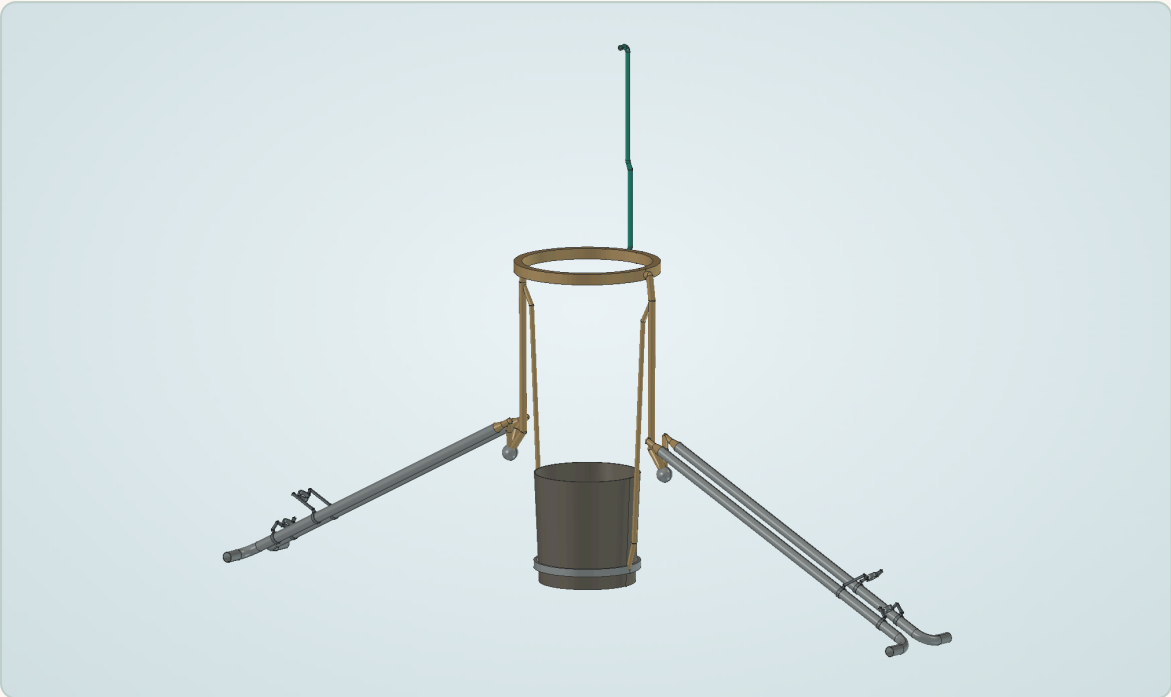

Bleed distribution and nozzle ring

C3
Air takeoff downstream of the third-stage stator

Collector
Distribution to the control branches

Sector injection
Jet deflection to control aircraft tilt

Roll pipes
Rotation around the longitudinal axis

- The historical account describes single-slot jet deflection and four-slot jet constriction. Separate flow simulations investigated those modes.

SIMULATION STUDIES · R6E2–R6E4

Nozzle flow and response

R6E2 estimates the local C3 bleed in an axisymmetric model. R6E3 treats sector injection in three dimensions.
R6E4 shows the transient from command to jet response.

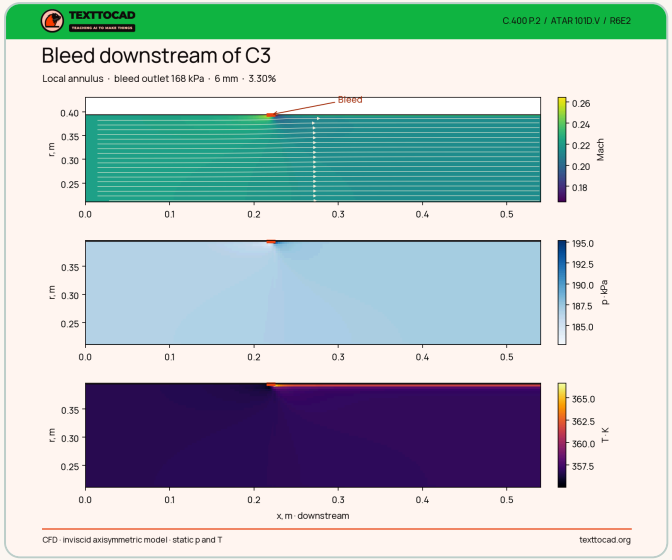

R6E2 · C3 section

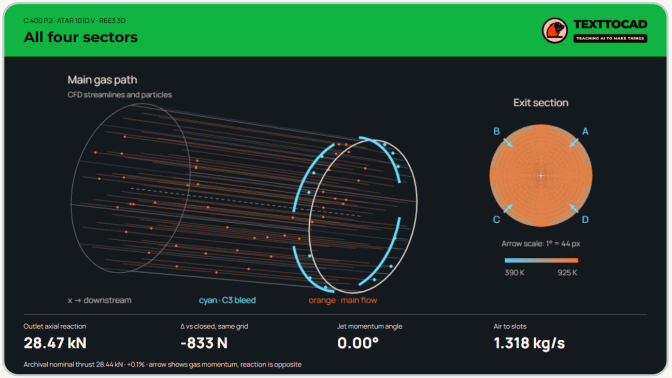

R6E3 · four injection sectors

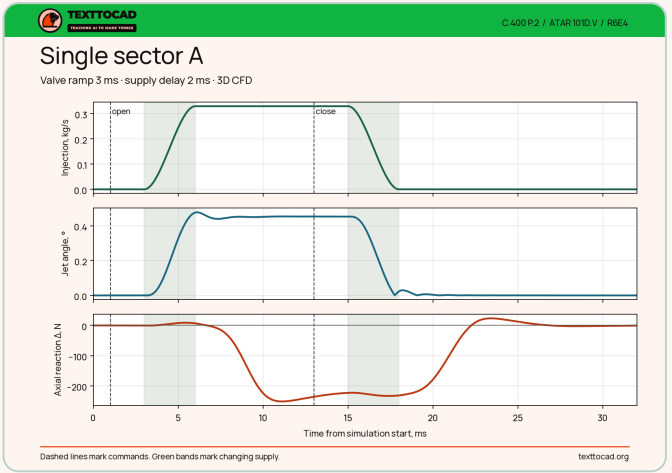

R6E4 · single-sector response

- The fields and plots apply to their simulation revisions. The prescribed delays, flows and pressures require rig identification for the R6E5 installation.

P1 SIMULATED FLIGHT · 5250 MM

From lift-off to a full stop

The six-degree-of-freedom simulation runs from thrust ramp to rest on four wheels. The profile covers climb, level flight, braking and a vertical landing.

Airborne	Displacement at rest	Fuel at rest
415.03 s	**4.511 km**	**65.07 kg**

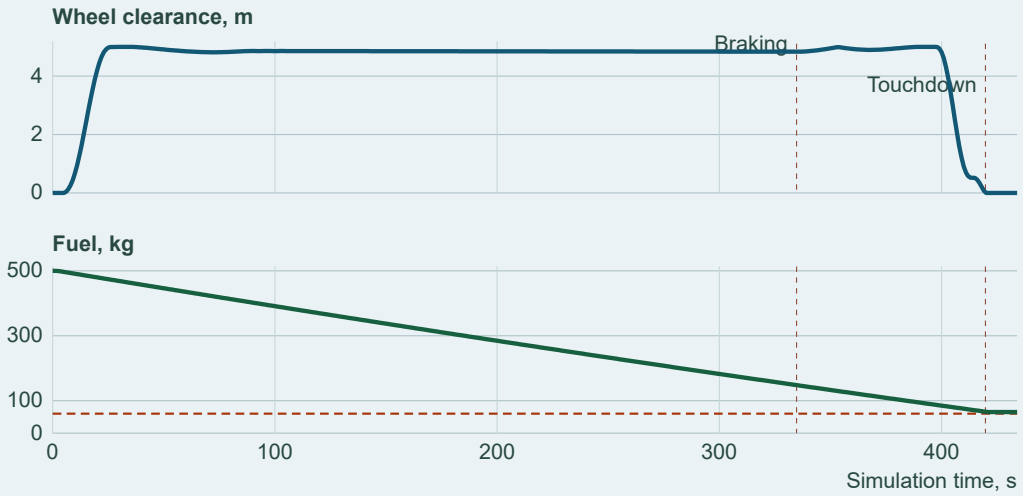

Wheel height and fuel versus time

4.72 s	**334.76 s**	**419.75 s**	**424.95 s**
Lift-off	Braking starts	First touch	Rest

The 60 kg floor includes 50 kg of landing reserve and 10 kg of unusable fuel. Touchdown speed is 0.090 m/s downward. Inputs are 500 kg initially, still air, CdA 10 m², 54 km/h and 5 m height.

HISTORICAL RECORD · AAMS

Free flight on 14 May 1957

Auguste Morel flew the C.400 P.2 untethered at Melun-Villaroche. AAMS records a flight duration of 4 min 15 s.

1957
Gantry tests preceded untethered flights.

14 May 1957
Auguste Morel's first free flight. AAMS, printed p. 22.

Le Bourget
The P.2 is held by the Musée de l'Air et de l'Espace.

2026
R6E5 reconstruction with the C3 route and P1 simulation.

p. 21
Layout, tank, gear and published dimensions

p. 22
First free flight and test programme

pp. 34–36
C3 bleed, jet control and engine data

- AAMS gives 2,600 kg in the narrative and 2,640 kg in the table. The weighing record, exact markings and fuel load for this flight remain open.

RELEASE PACKAGE · 23 NOV 2026

Models, data and verification

The release ties the sheets to the native R6E5 assembly and records the sources of historical and simulation illustrations separately.

FreeCAD · R6E5 · 5250	Native project assembly
STEP · R6E5 · 5250	Body selection for exchange
FreeCAD · Atar 101 D.V	R6E1 engine, source for the section
First open	FreeCAD screenshot before camera adjustment
Shot register	Cameras, visibility and purpose for each sheet
Provenance	Method, example, source files and hashes
SHA-256 manifest	Release integrity checks

R6E5 · SHA-256

```
220ff95325335af6e0afea8accb6e728ed2bdbc66
90ae983ea9abe58cfe9fb31
```

The model is a digital reconstruction. Structural adequacy, operating limits and clearance for manufacture or flight require separate verification.