The complete craft

R5 · 4100 mm

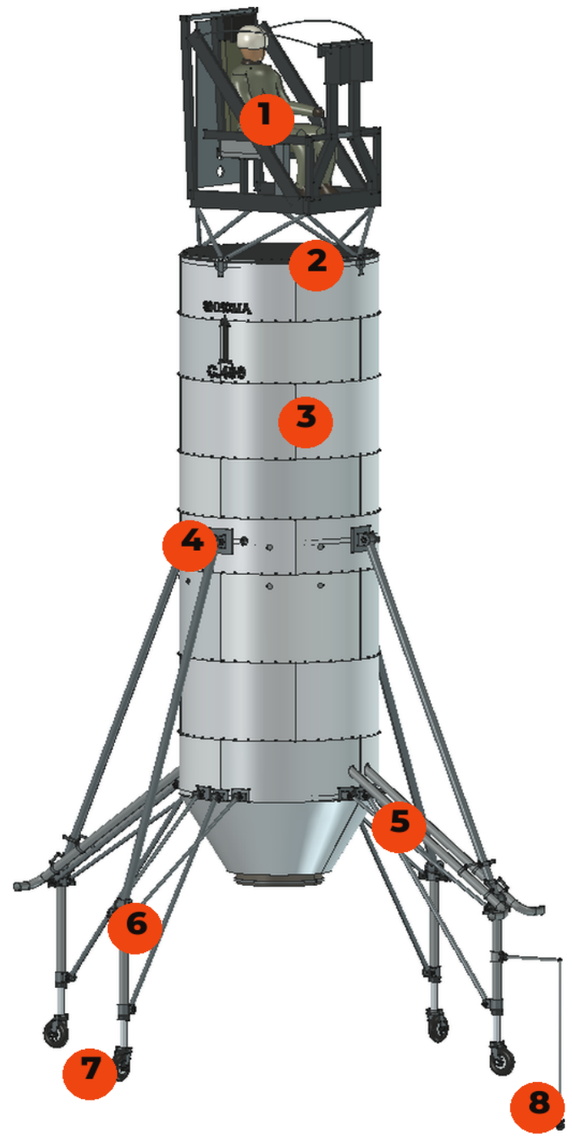

1 Pilot station 2 Air intake 3 Fairing 4 Upper stay joint 5 Lower stay 6 Bleed pipes 7 Wheel 8 Touchdown roller

Under the skin

R5 · native view

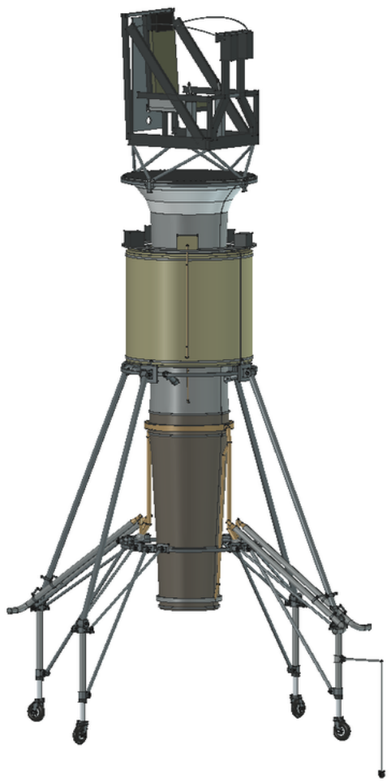

Atar · cycle diagram

Atar cycle

Air intake
Air enters from above

Compressor
Air is compressed

Combustion chamber
Burning fuel adds heat

Turbine
Extracts energy to drive the compressor

Nozzle
Accelerates the jet downward

An annular tank surrounds the engine. Outer casings and load rings are visible. The diagram explains processes beyond the modeled geometry.

Lift and control

Thrust and weight · schematic

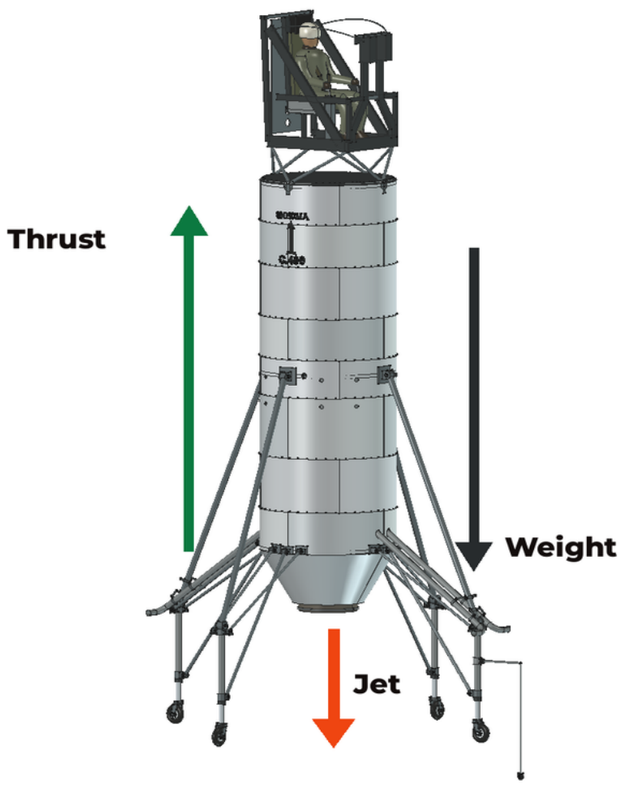

R5 exhaust path

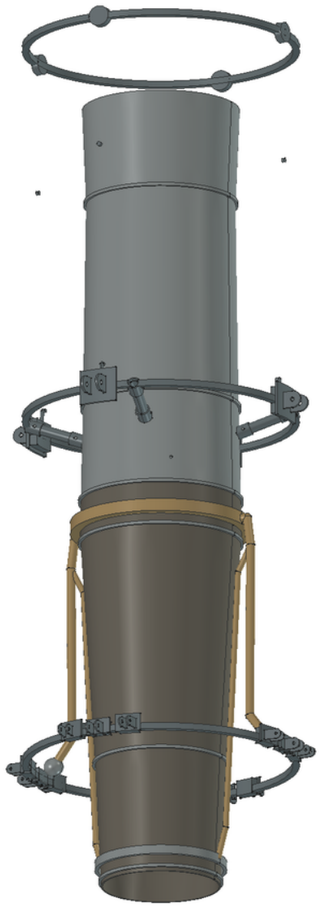

The main jet points downward. Jet deflection and tangential outlets help control attitude. Arrows are qualitative.

Two landing gear diagonals

4100 mm · image reconstruction

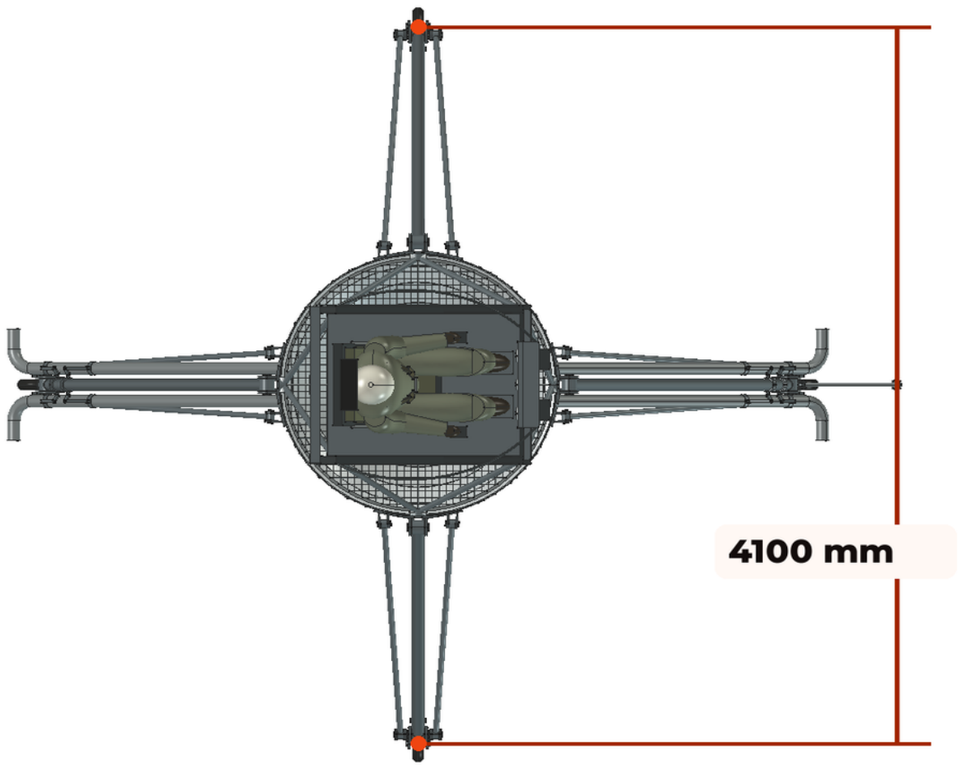

5250 mm · published dimension

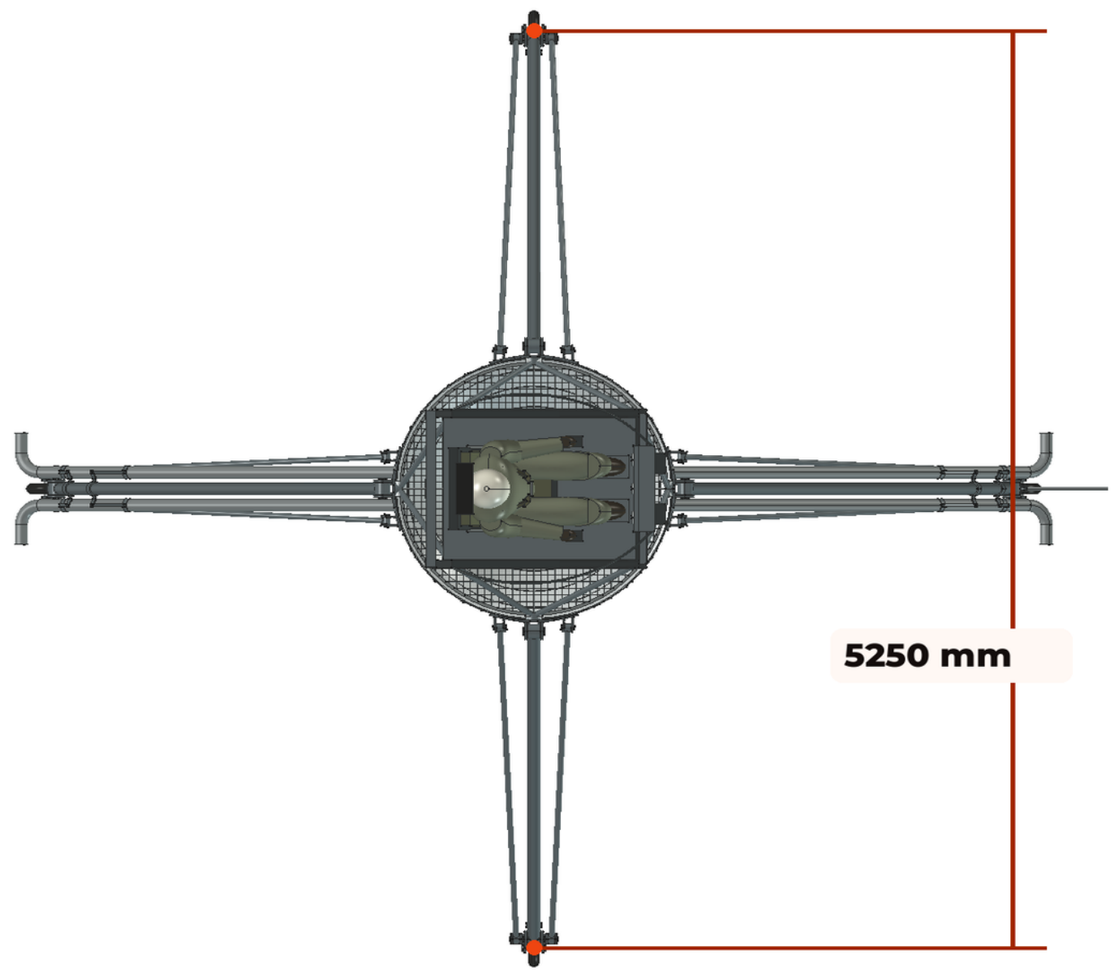

Common scale. The model measures between opposite wheel centres. Reference points of the published historical dimension remain unresolved.

Engine bearer and upper mount

Body and mating parts

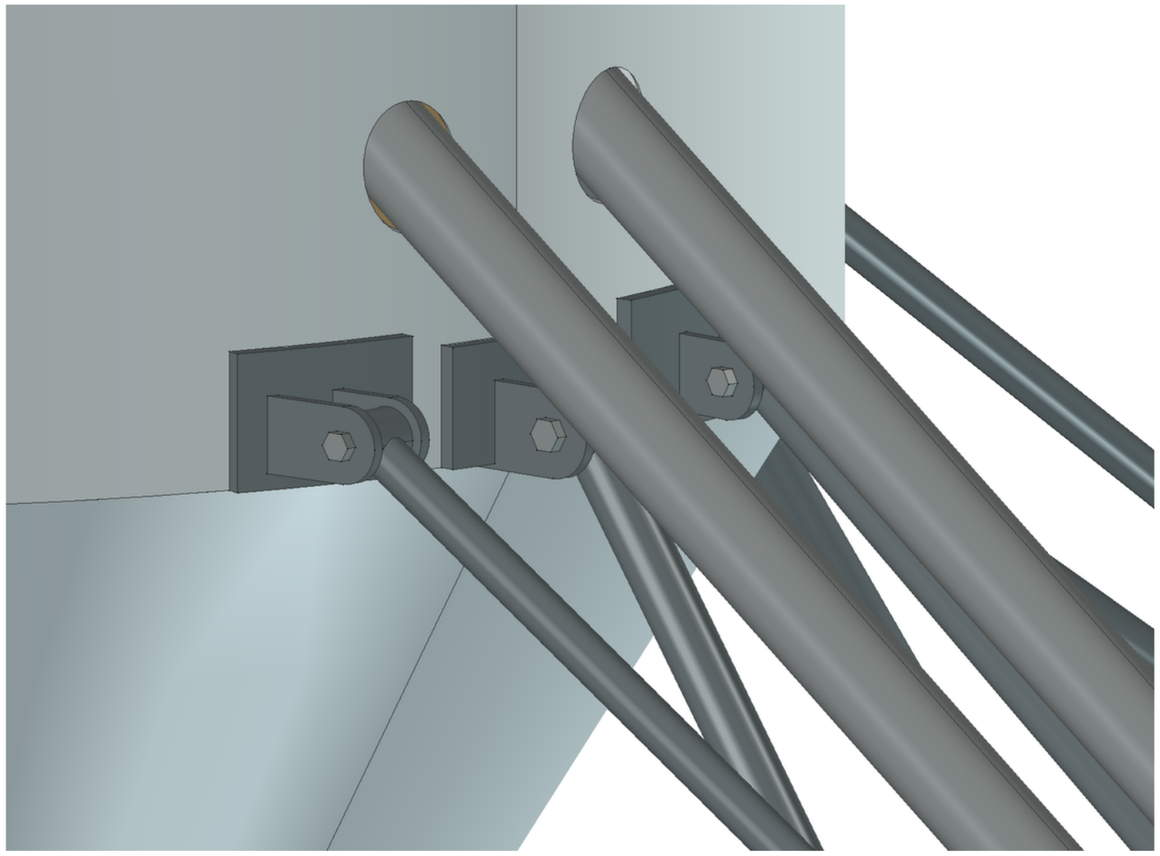

R5 · upper clevis and pin

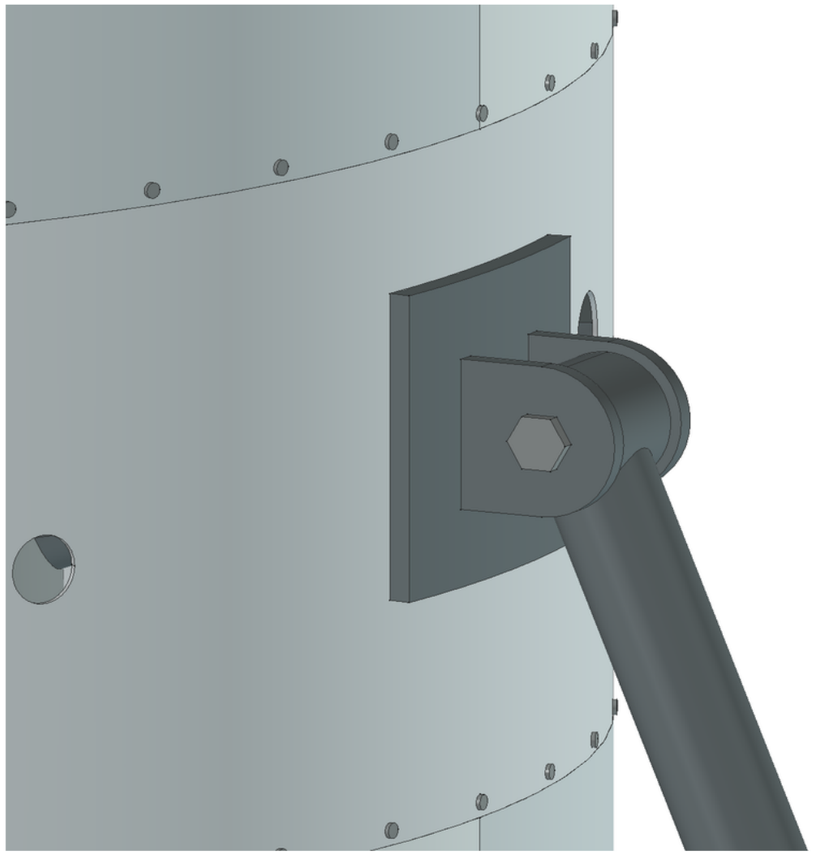

The inferred load path runs from the engine bearer through rings to gear pins and stays. The backing piece provides a mating interface. Strength remains open.

Lower stays and knee joint

R4 · knee

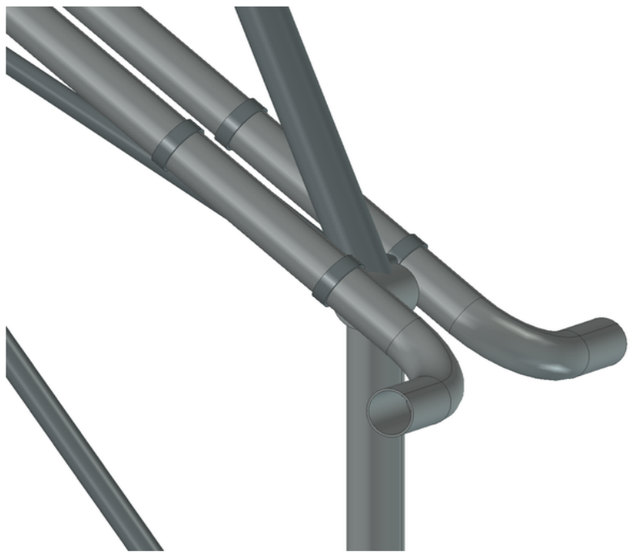

R5 · knee

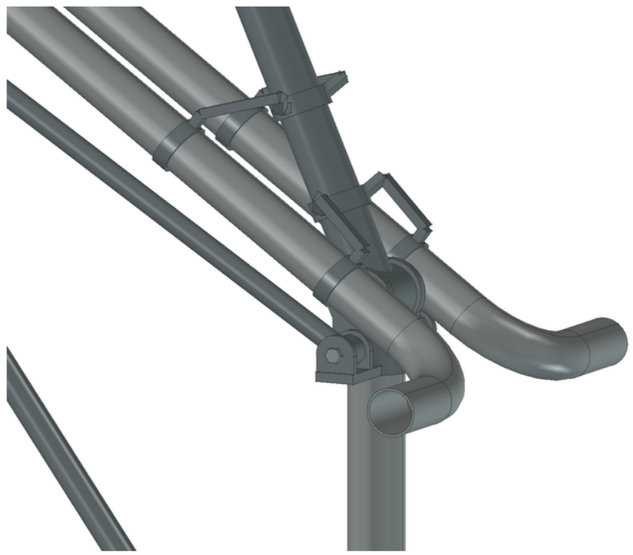

R5 · lower joint

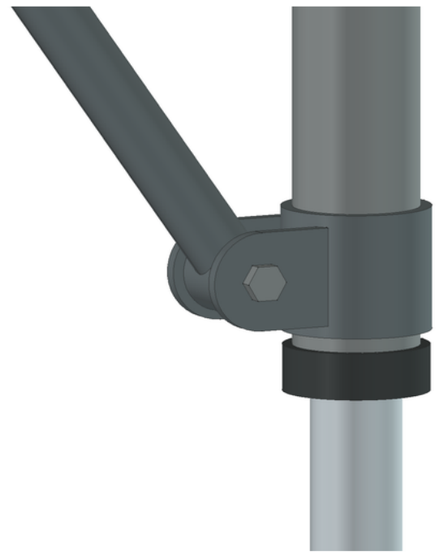

R5 adds separate eyes, mating surfaces, pins and spacers. R4 and R5 knee views use the same camera.

Touchdown roller

Pivot

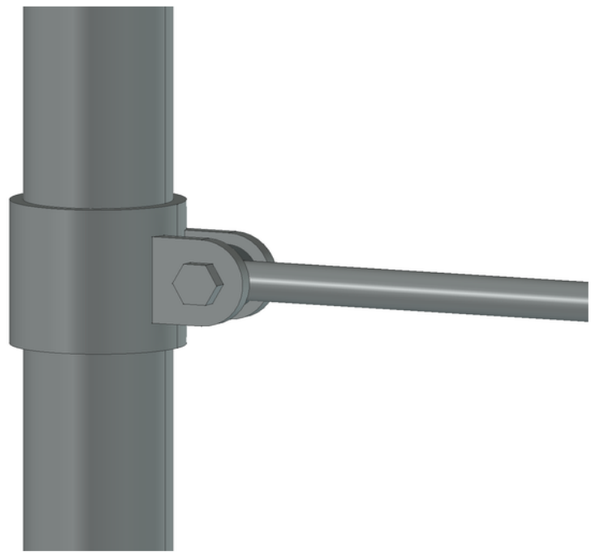

Roller fork

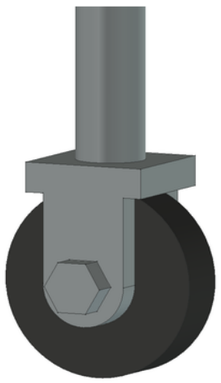

180 mm travel · 90° swivel



The arm was assessed from 0–45°. The clearance lower bound for assessed pairs is 9.825 mm. Return, switch and indication remain open.

Pilot station

Museum · 2022



R5 · pilot surrogate

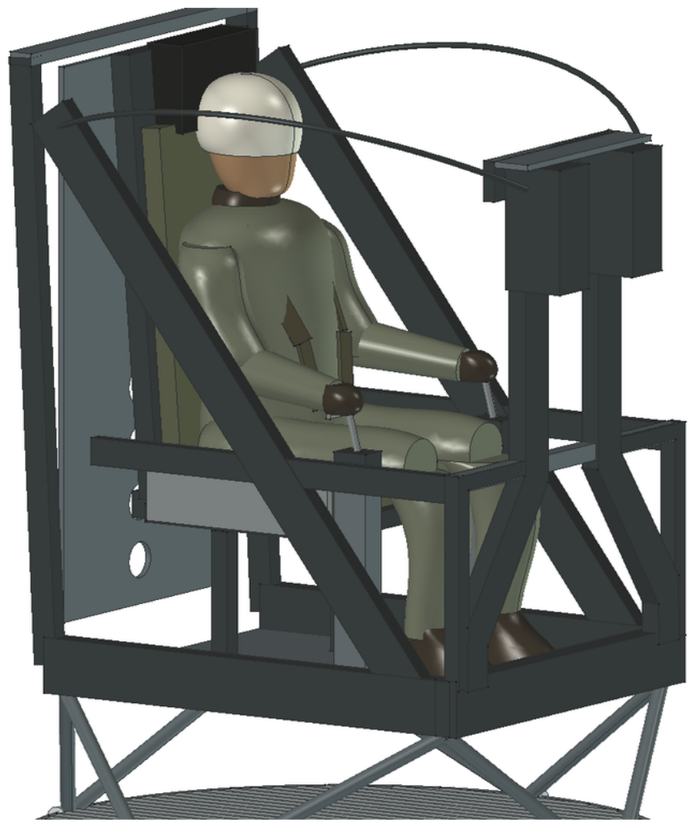

Seat, panel, both levers and footrests. These different angles illustrate layout. Reach was assessed for a single R3 pose. Photo Alan Wilson, CC BY-SA 2.0, cropped.

Routing and supports

R4 · circuit overview

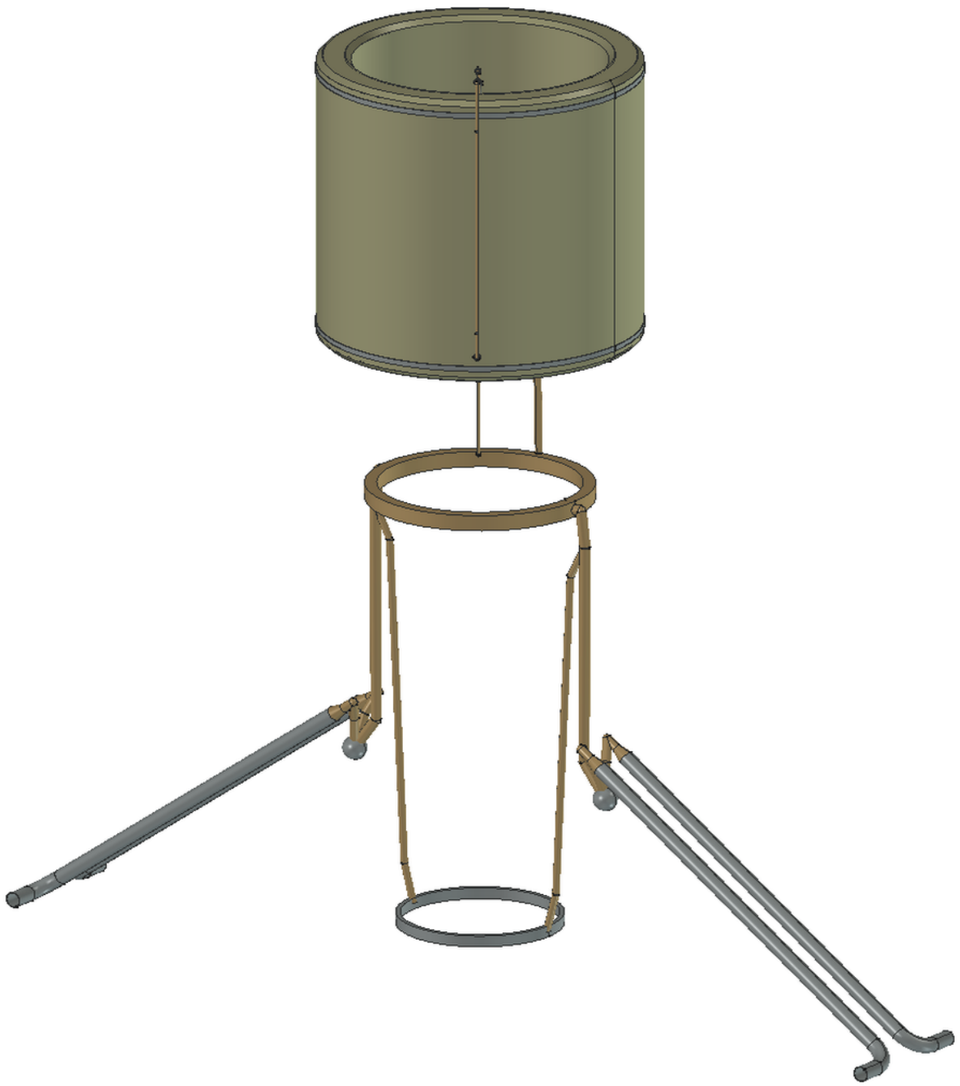

R5 · external pipe supports

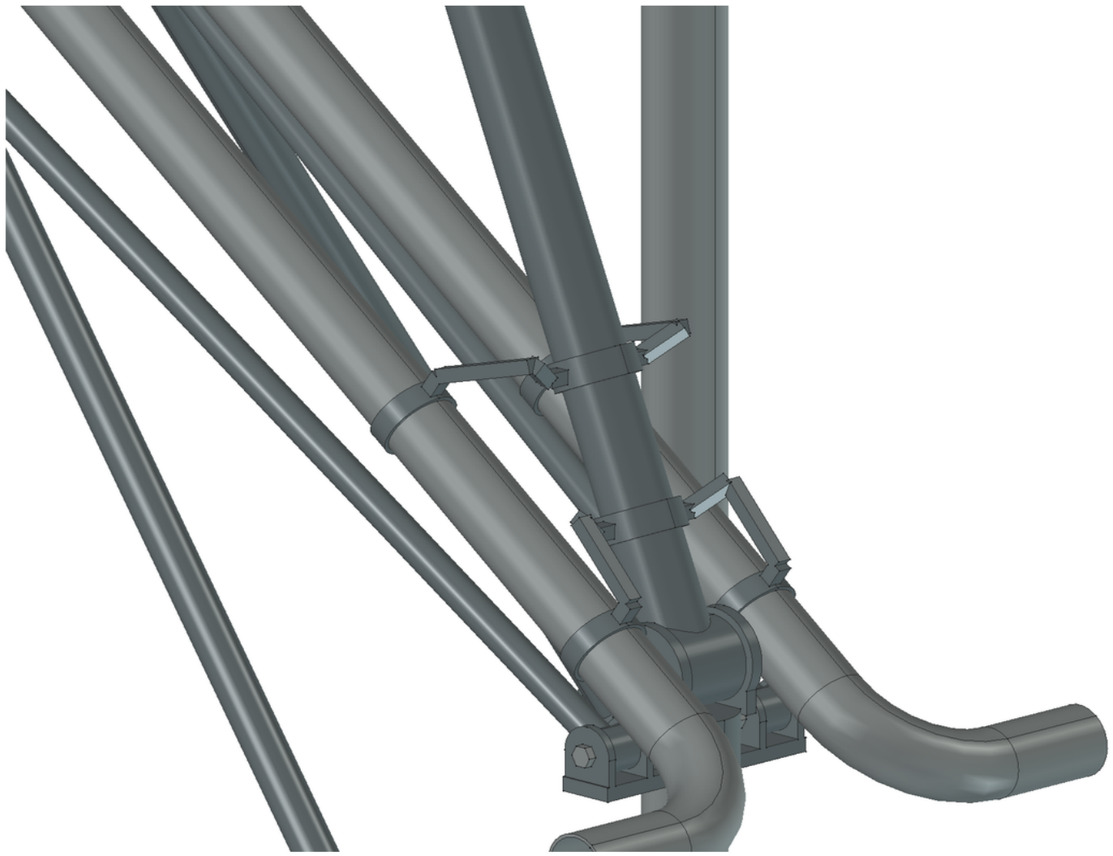

Annular tank, feeder and fuel lines are distinct from bleed-air routes. R5 adds eight external pipe supports. Operational lubrication and electrical systems remain open.

R5 and Spec_R5 status

R4 calculation

R4 landing case

2600 kg · 180 mm
Four legs in the R4 scenario

106.24 N/mm
Stiffness per equivalent strut

9140.94 N·s/m
Damping per equivalent strut

2 m/s · 2° tilt
Peak total reaction 3.316 / 3.405 times weight

Open
R5 joint strength and physical tests

Priced entries · 14 Nov 2026

Priced scope

4100 mm · Russia
RUB 2,828,930 · base forecast

5250 mm · Russia
RUB 2,840,050 · base forecast

4100 mm · Texas
USD 118,966 · base forecast

5250 mm · Texas
USD 119,362 · base forecast

419 of 473
Engine, assembly and testing excluded

R1–R5 progresses from photo comparison to interface checks. The catalogue describes 15 systems and 473 entries. The estimate prices 419 rows. See the catalogue for the evidence and gaps.