Sheet 01

Complete assembly

NATIVE CAD VIEW

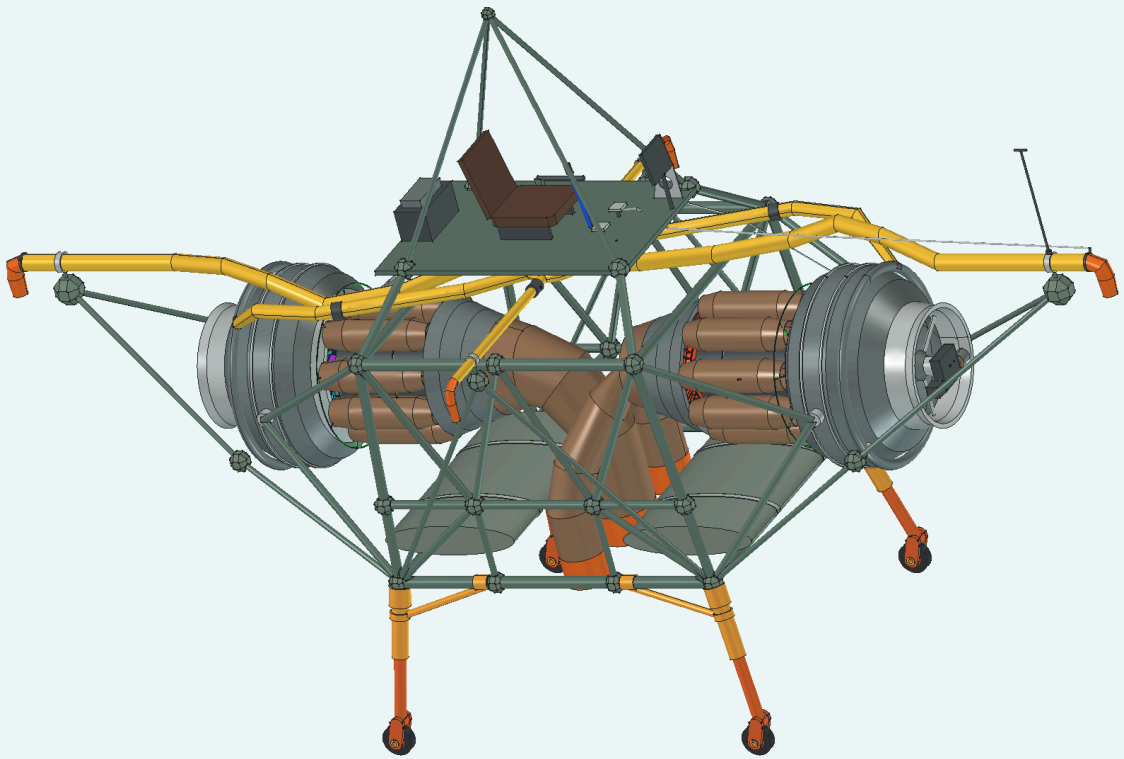

Front three-quarter view. Two Nenes, the pilot platform, the frame pyramid and four castoring supports form the early Hucknall layout.

Модель/XJ314_R11_G1.FCStd

Sheet 02

Aft view

NATIVE CAD VIEW

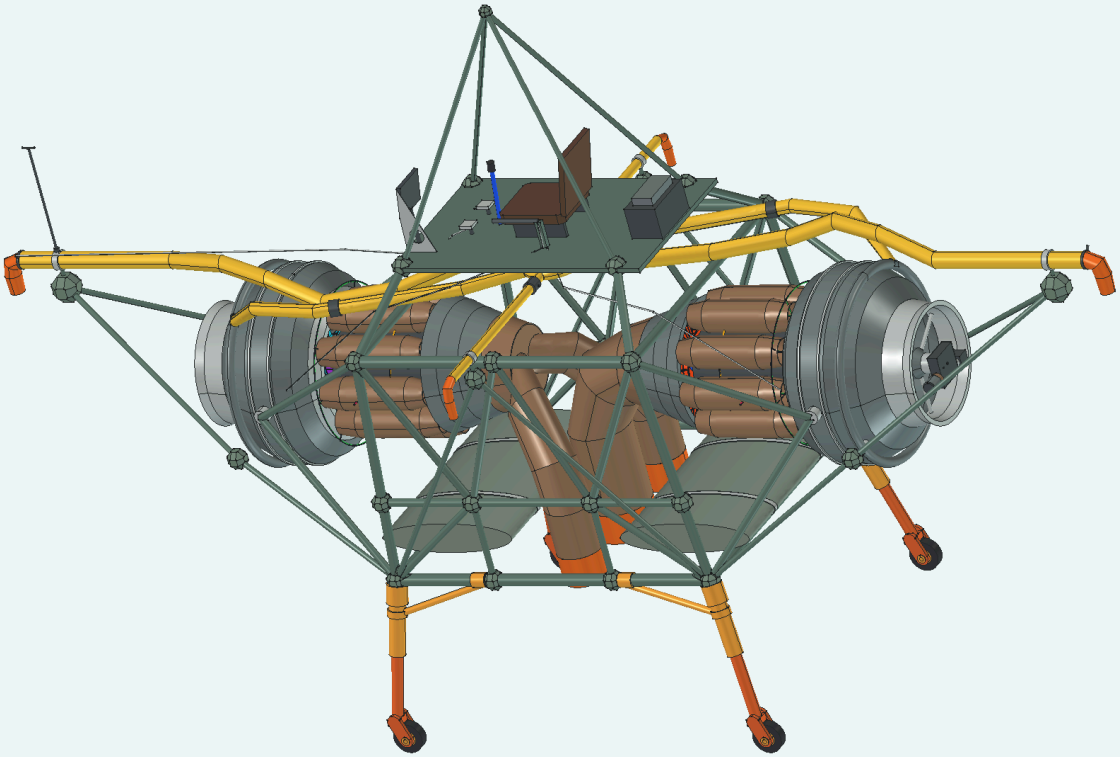

Aft engine, central main nozzle and rear supports. View centre and scale match sheet 01.

Модель/XJ314_R11_G1.FCStd

Sheet 03

Plan layout

NATIVE CAD VIEW

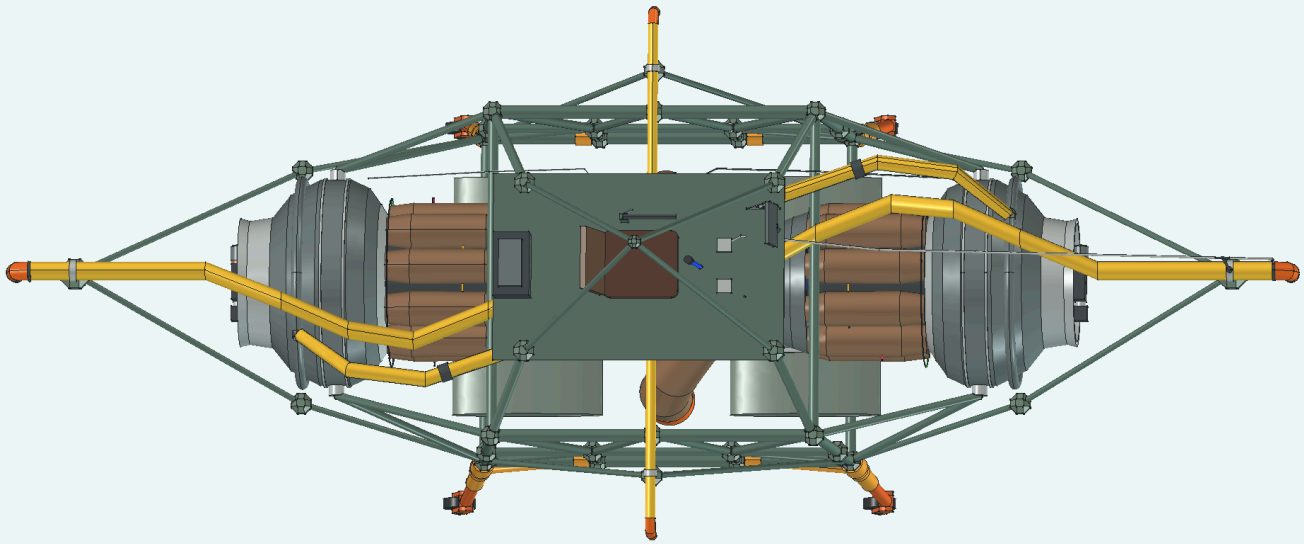

The two Nenes sit fore and aft. Four remote nozzles act on pitch and roll.

Модель/XJ314_R11_G1.FCStd

Sheet 04

Frame and supports

SUBSYSTEM

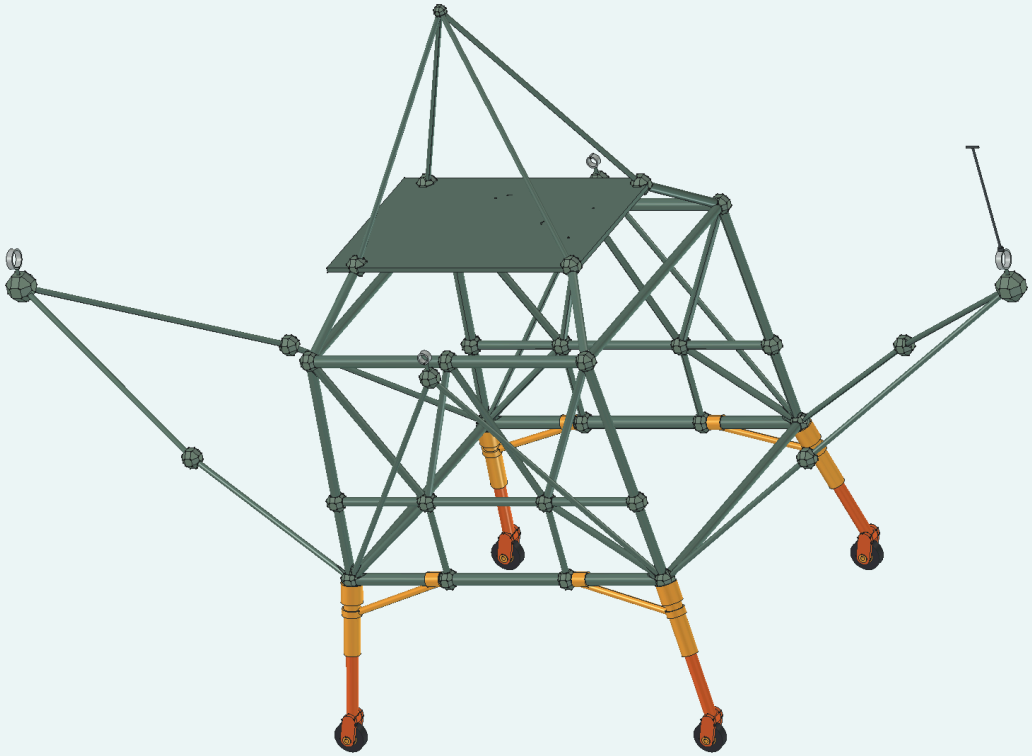

Tubular truss, pilot platform and four supports. Engines, tanks and air ducts are hidden. The camera matches sheet 01.

Модель/XJ314_R11_G1.FCStd

Sheet 05

Exploded systems

ILLUSTRATIVE EXPLODED VIEW

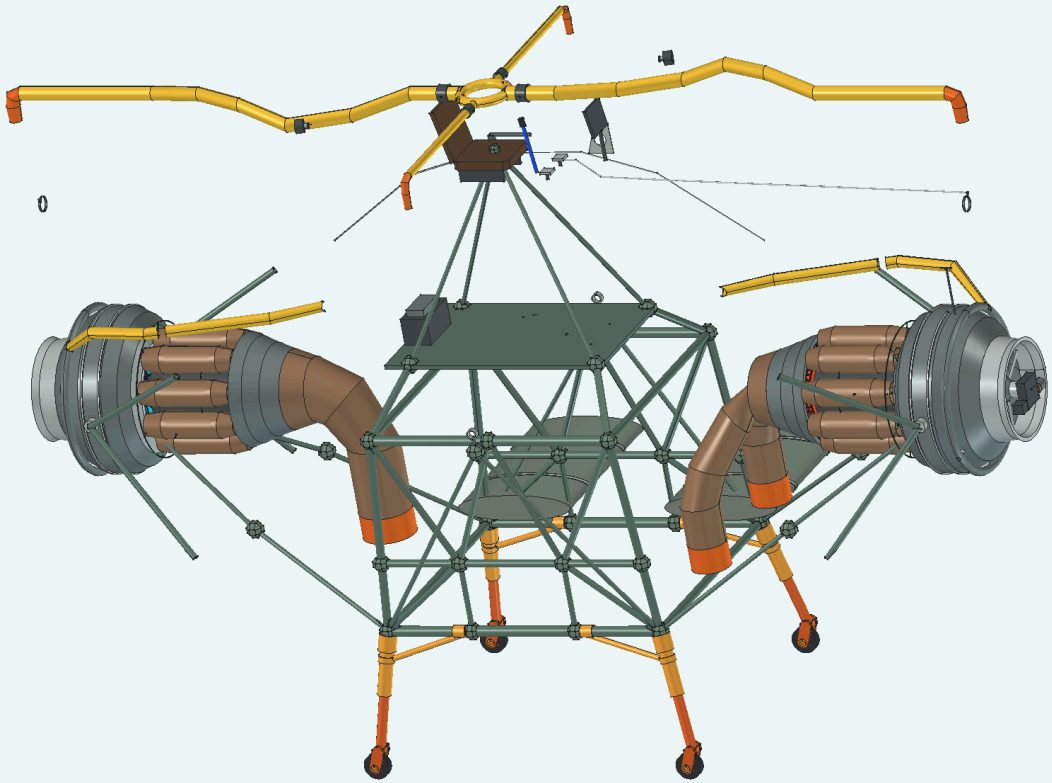

The engines, control-air circuit, cockpit and fuel volumes are offset from their assembly positions. The shot map records the offsets. This view illustrates system membership.

Модель/XJ314_R11_G1.FCStd

Sheet 06

Engines and main nozzles

SUBSYSTEM

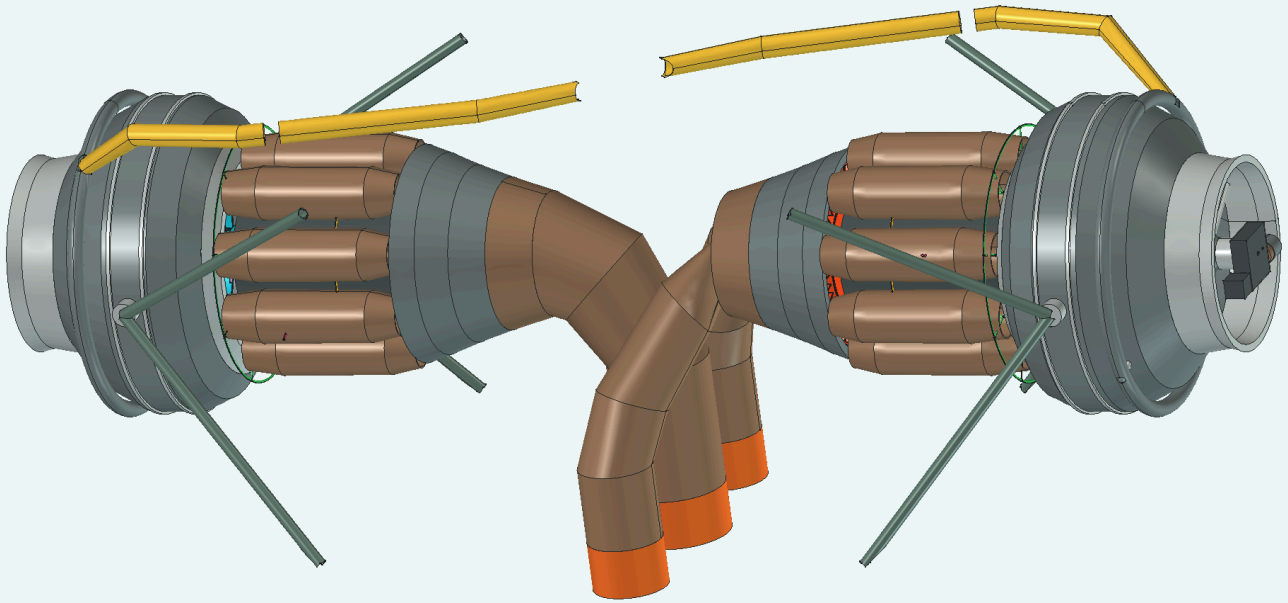

The front Nene serves two main outlets through a bifurcated duct. The rear Nene feeds the central outlet.

Модель/XJ314_R11_G1.FCStd

Sheet 07

Control-air circuit

SUBSYSTEM

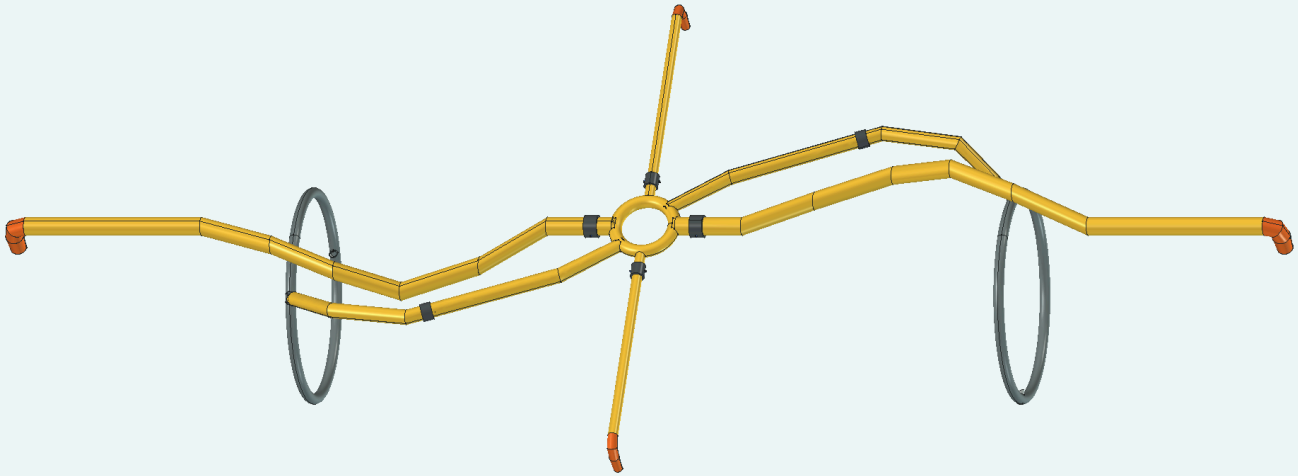

F/R bleed feeds enter a common annular collector through check valves. Four branches supply the control nozzles.

Модель/XJ314_R11_G1.FCStd

Sheet 08

Forward check valve F

CLOSE-UP

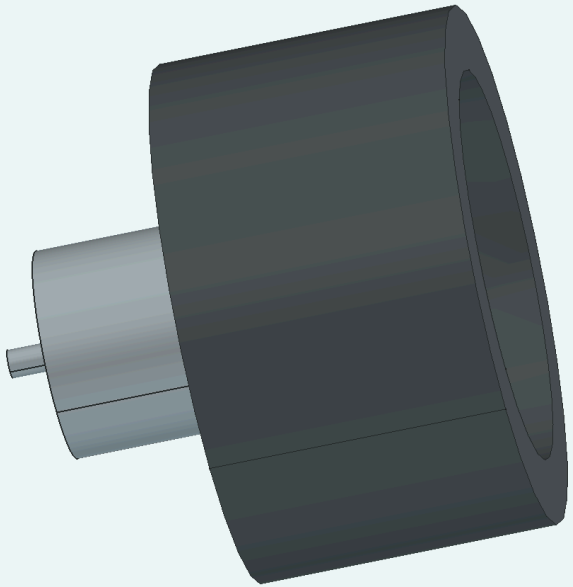

Isolated housing, seat, poppet, spring and damper parts in their native locations. The housing obscures some internal components.

Модель/XJ314_R11_G1.FCStd

Sheet 09

Rear check valve internals

CLOSE-UP

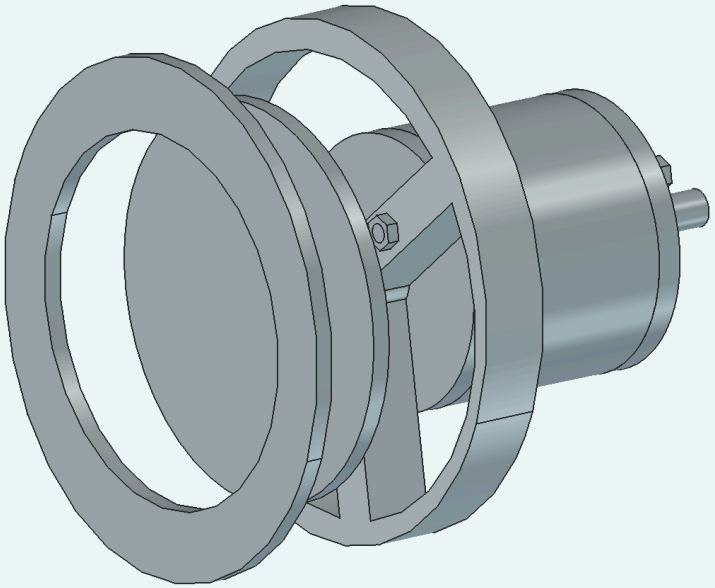

The housing is hidden. The seat, poppet, spring and damper retain their saved positions in the rear branch.

Модель/XJ314_R11_G1.FCStd

Sheet 10

Pilot platform and controls

SUBSYSTEM



Seat, control stick, pedals, thrust lever and instrument panel within the platform structure.

Модель/XJ314_R11_G1.FCStd

Sheet 11

Fuel volumes and supports

SUBSYSTEM

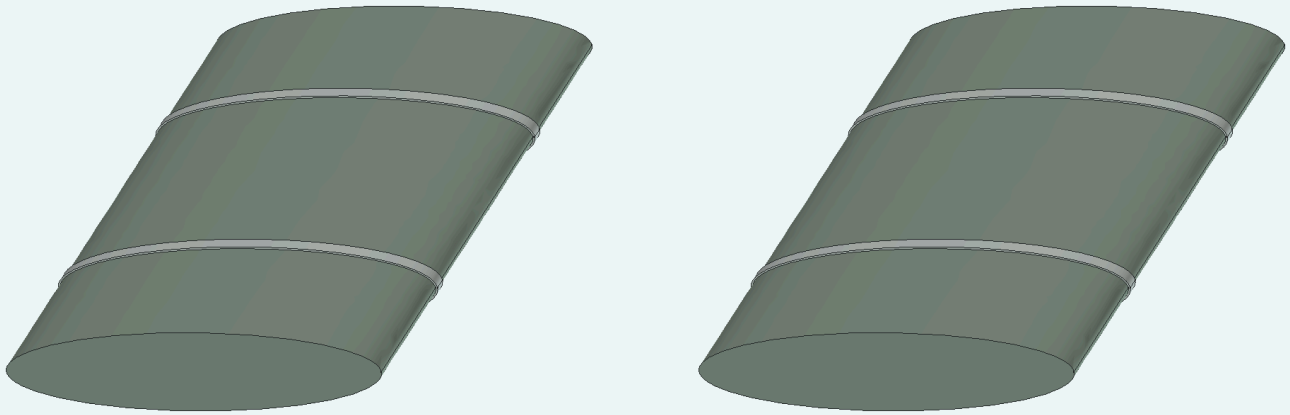

Two reconstructed volumes and their restraints in native positions. H190 fuel loading belongs to the flight model.

Модель/XJ314_R11_G1.FCStd

Sheet 12

Front starboard support G1

CLOSE-UP

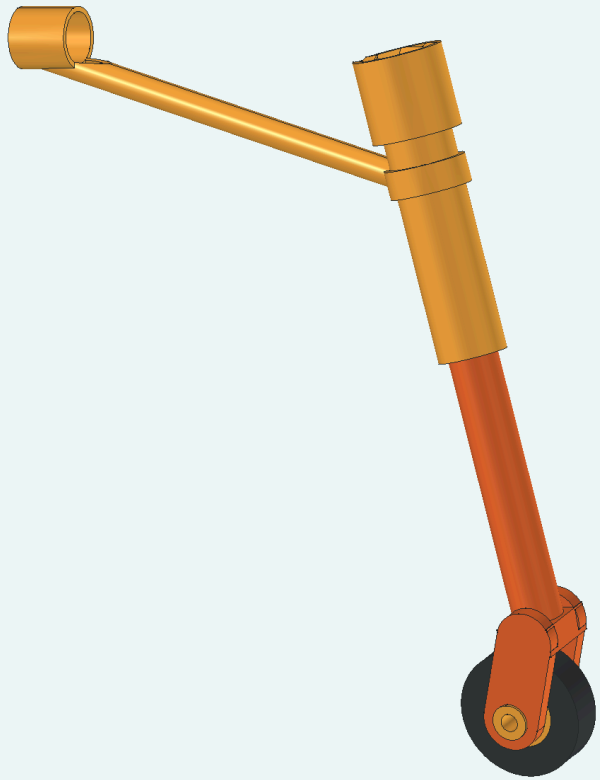

Support 3 with the wheel installed. The view shows the reinforced housing, brace and lower assembly in native positions.

Модель/XJ314_R11_G1.FCStd

Sheet 13

G1 fork and hollow axle

CLOSE-UP

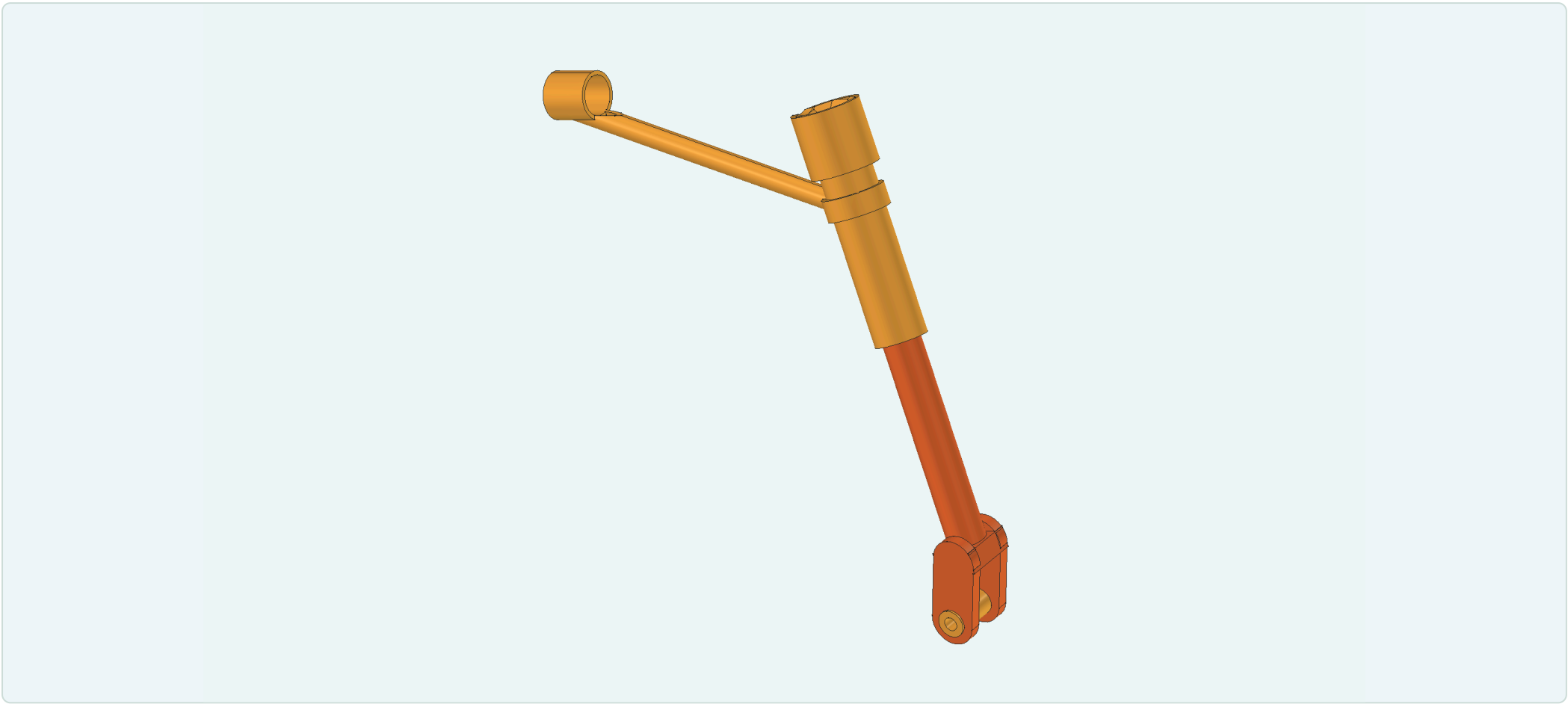

Tyre and hub are hidden. The fork and ram form one piece, with an Ø56/28 mm axle and Ø44×5 mm lower brace. Axle retention and the upper joint remain open.

Модель/XJ314_R11_G1.FCStd

Sheet 14

Longitudinal section at Y = 0

FREECAD VIEWPORT SECTION

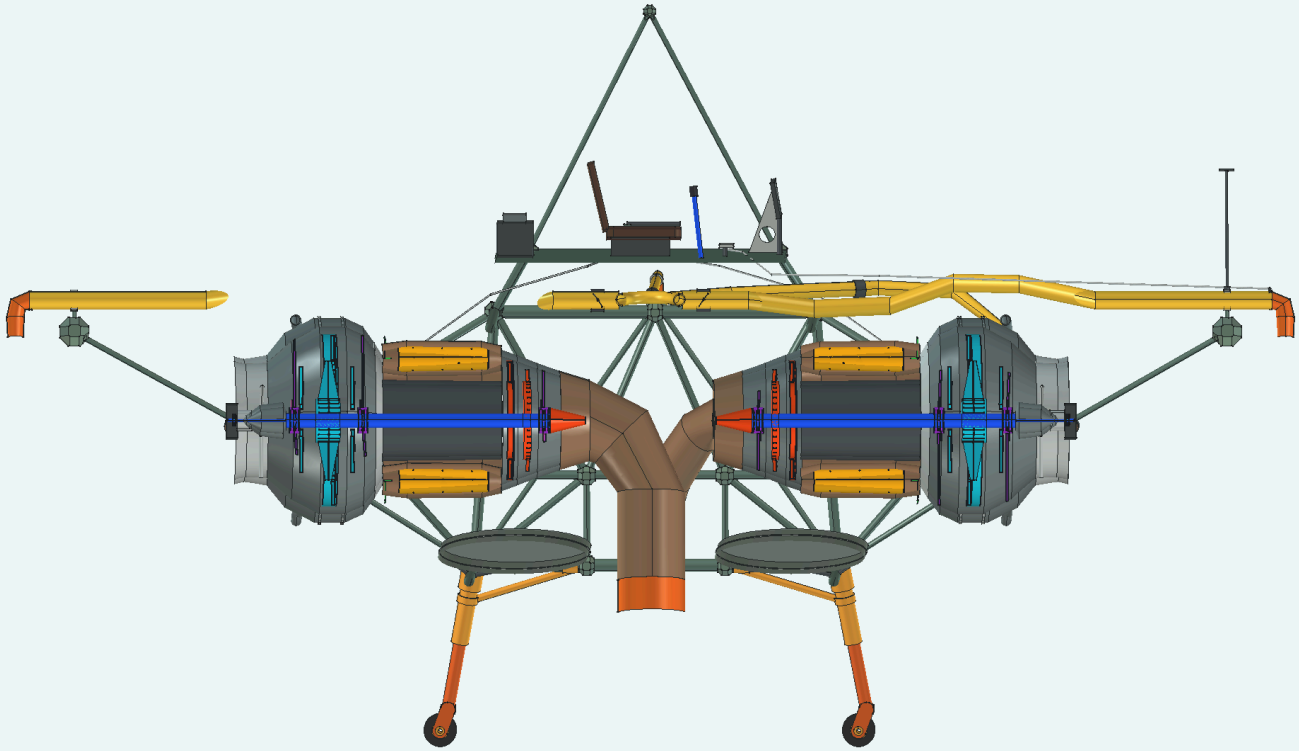

The plane uses native CAD coordinates and retains Y ≥ 0. FreeCAD viewport clipping leaves section faces open.

Модель/XJ314_R11_G1.FCStd

Sheet 15

Nominal and failure cases

R11 SIMULATION BASELINE

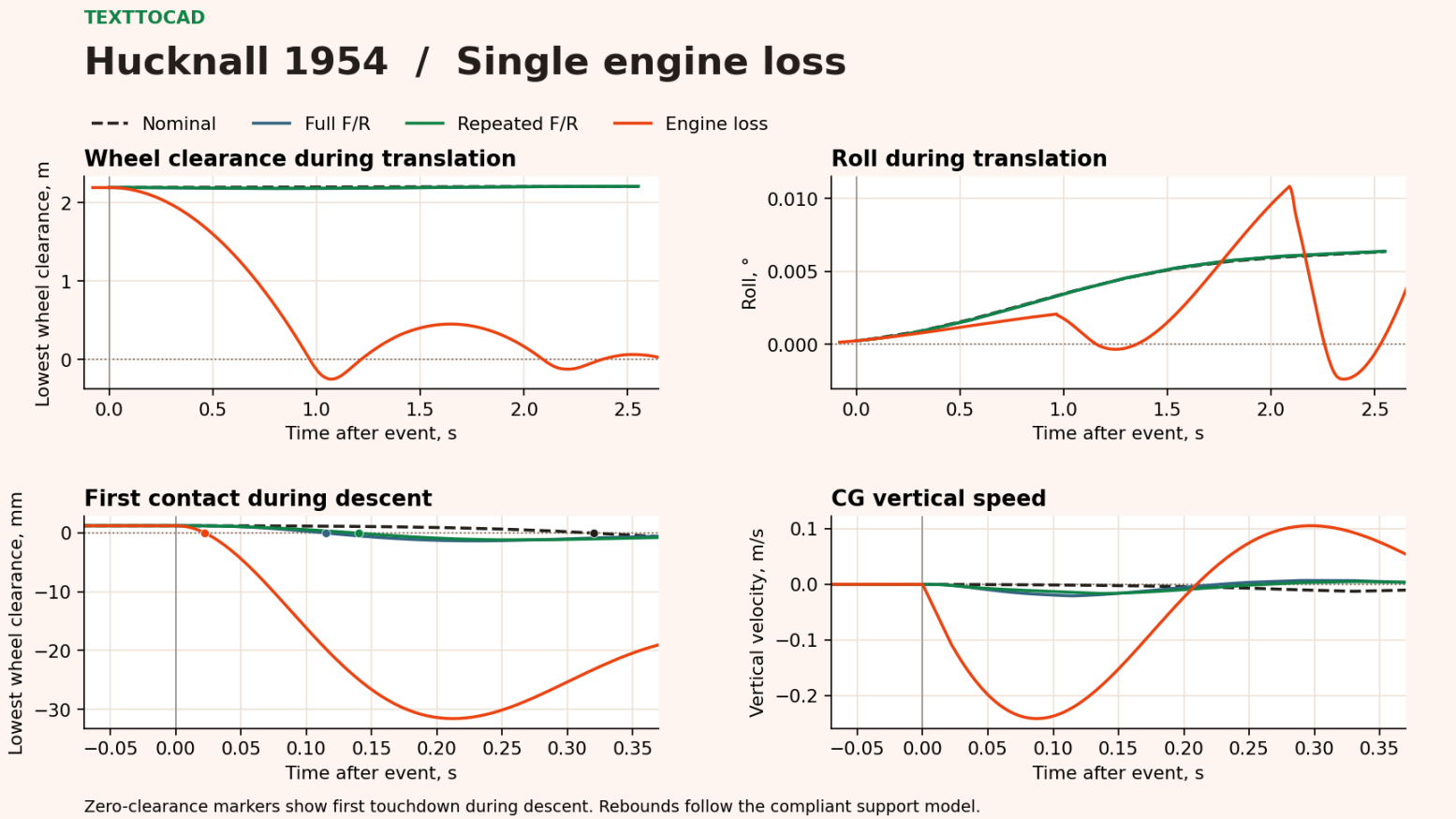

The 600 s R11 run includes 590.215 s airborne in the nominal case. Early engine loss brings first contact at 156.417 s. The historical account reports a duration of nearly ten minutes.

evidence/flight_verification_r11.json

Sheet 16

Baseline R11 wheel reactions

R11 SIMULATION BASELINE

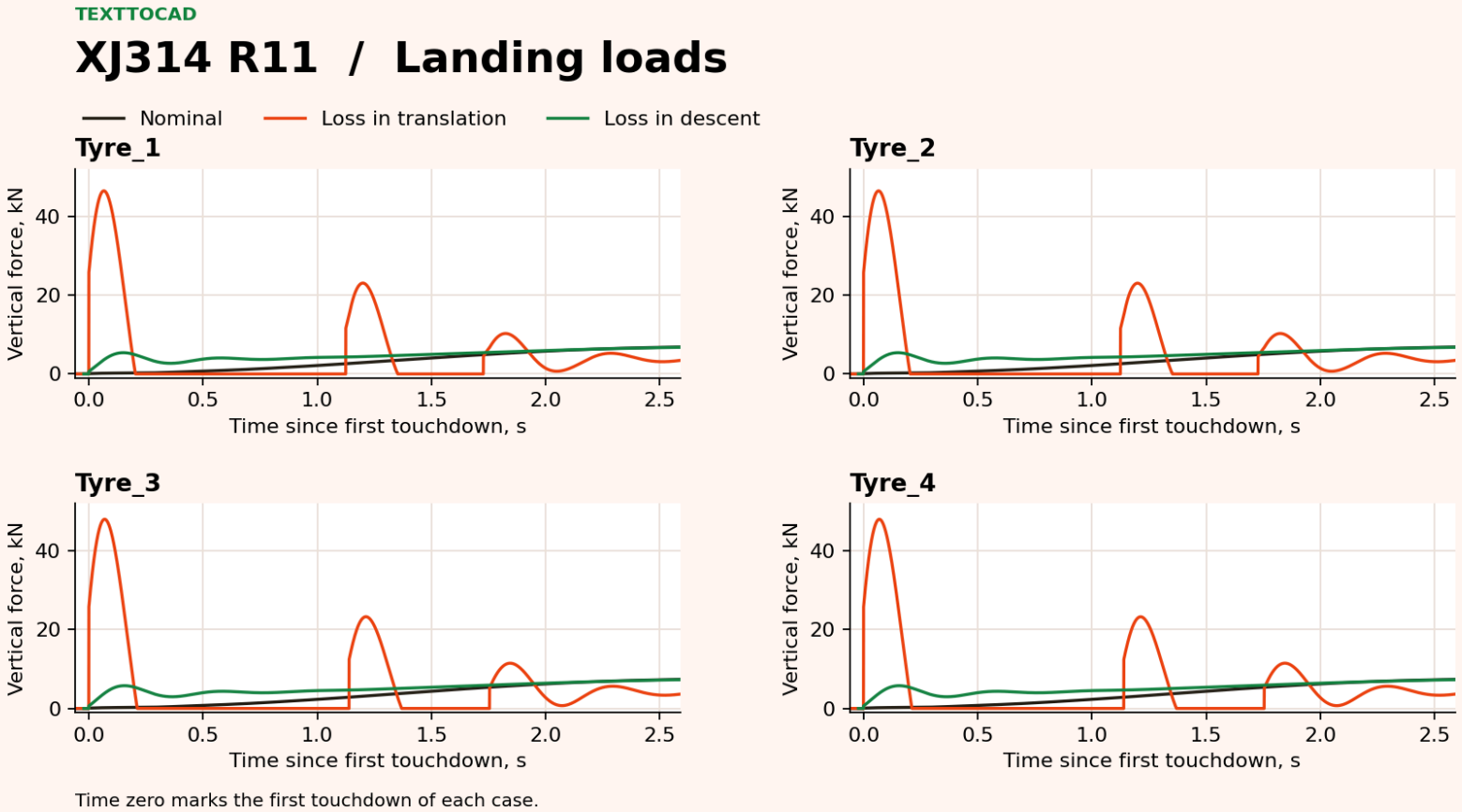

Early loss gives a 188.69 kN combined vertical reaction and up to 256.05 mm equivalent stroke. The plots use R11.

evidence/impacts_r11.json

Sheet 17

Reinforced G1 section reserve

G1 SIMULATION

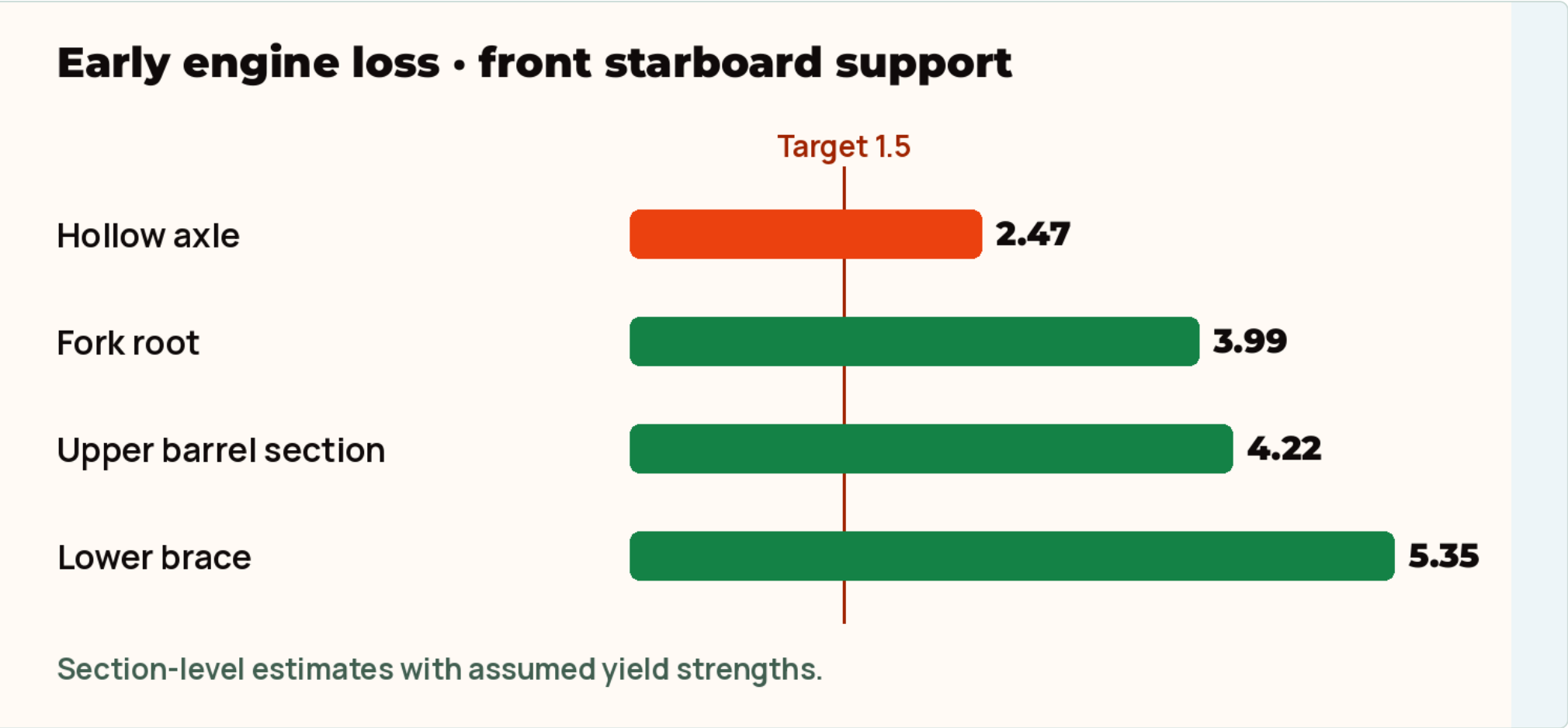

Early loss gives a 189.36 kN combined reaction and up to 257 mm stroke. The axle governs at 2.47 with assumed material properties. The upper joint, frame and axle retention remain open.

evidence/strength_receipt.json

Sheet 18

FreeCAD first opening

NATIVE CAD VIEW

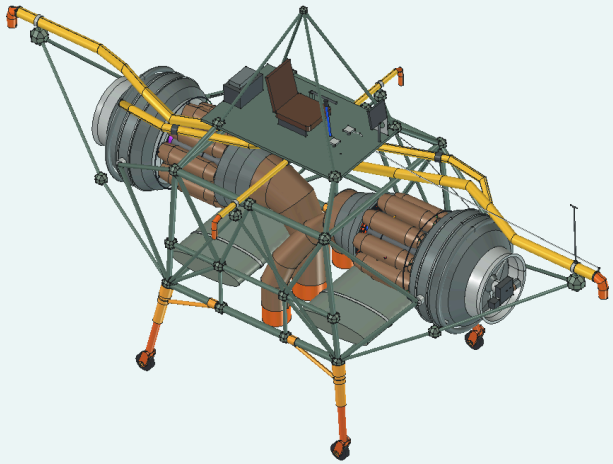

Captured in an isolated process before any camera or visibility commands. The saved G1 model opens with 482 visible physical objects.

Модель/XJ314_R11_G1.FCStd

Sheet 19

Nene F longitudinal section

FREECAD VIEWPORT SECTION

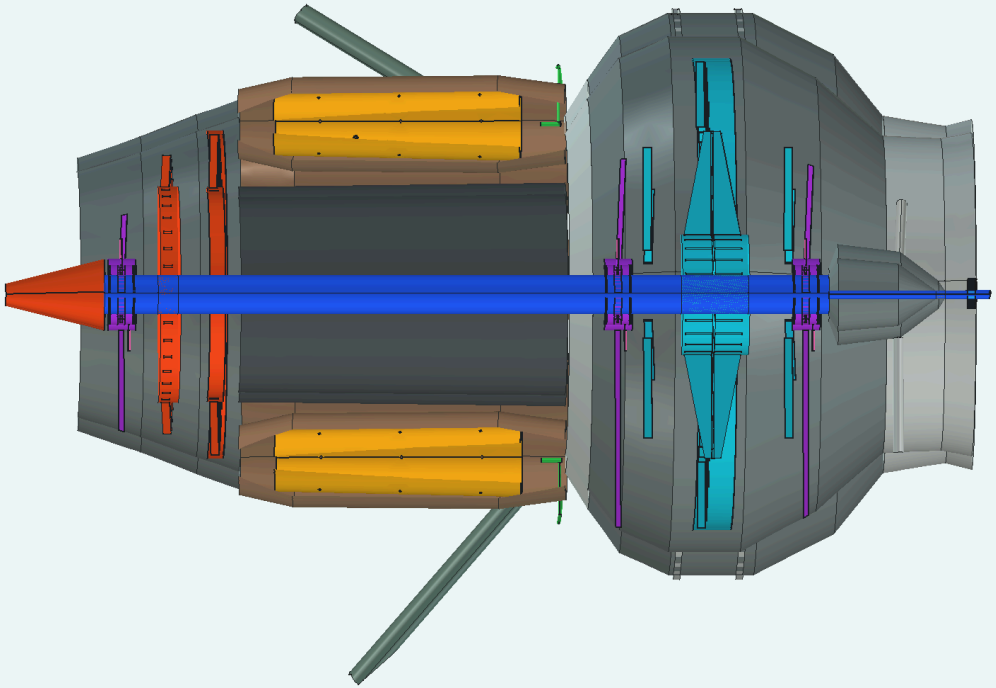

Intake on the right. The flow path shows the impeller, diffuser, combustion sections and turbine. The shaft is blue. Axial cut at Y = 0.

Модель/XJ314_R11_G1.FCStd

Sheet 20

Nene R longitudinal section

FREECAD VIEWPORT SECTION

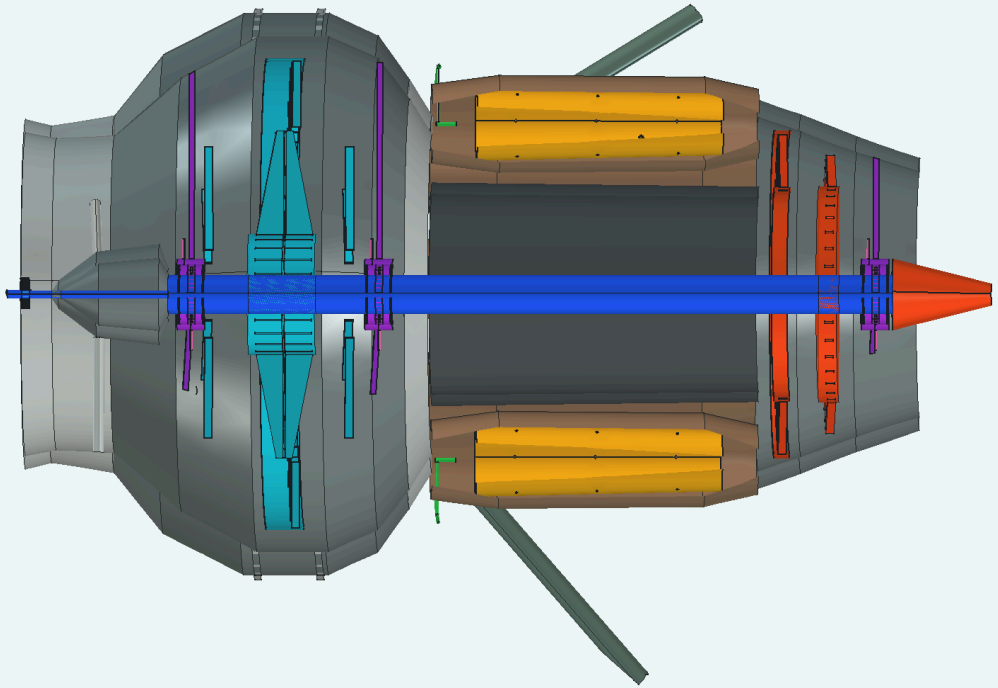

Intake on the left. The rear Nene faces the opposite way. Scale and cut plane match the front engine. The internals are reconstructed using Nene II evidence.

Модель/XJ314_R11_G1.FCStd

Sheet 21

Main thrust outlets from below

NATIVE CAD VIEW

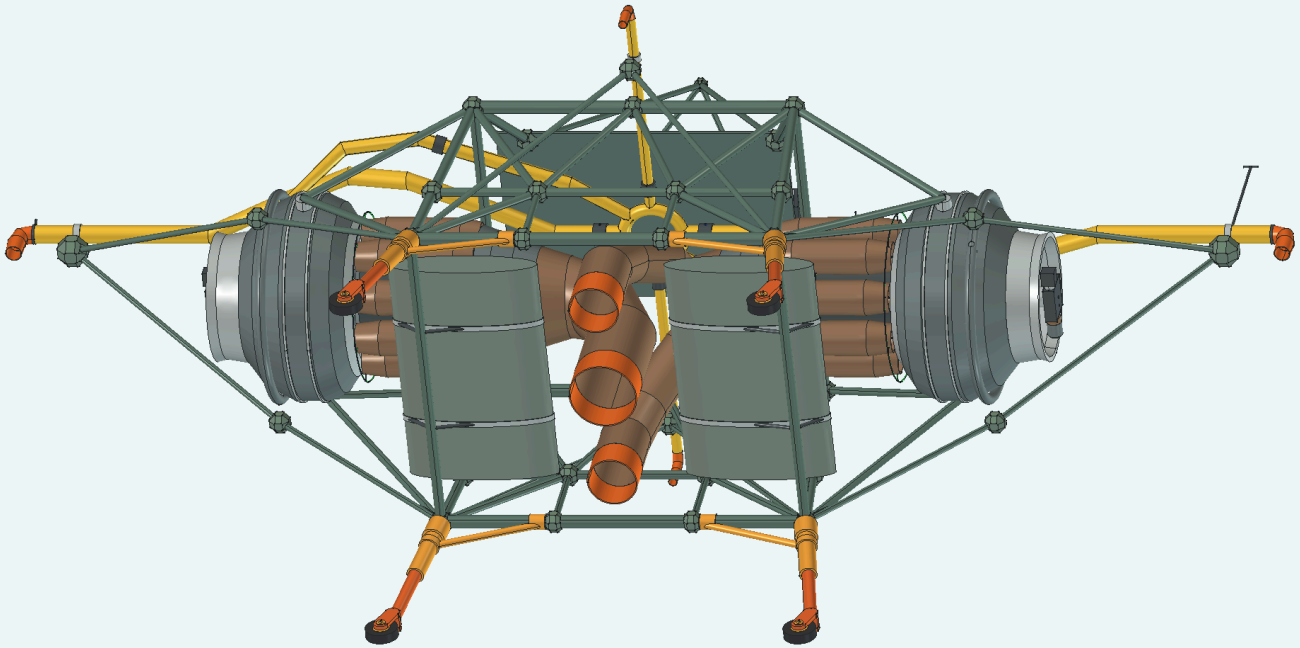

The underside shows all three main outlets and their ducts. The front Nene feeds the two side outlets. The rear engine feeds the central outlet.

Модель/XJ314_R11_G1.FCStd

Sheet 22

Early Hucknall · photograph 6-1

ARCHIVE SOURCE · R3

TEXTTOCAD
TEACHING AI TO MAKE THINGS
XJ314 / HUCKNALL / R3 · EN

Early XJ314 in free flight

Hucknall · before January 1955 · plate 6-1

Original photograph

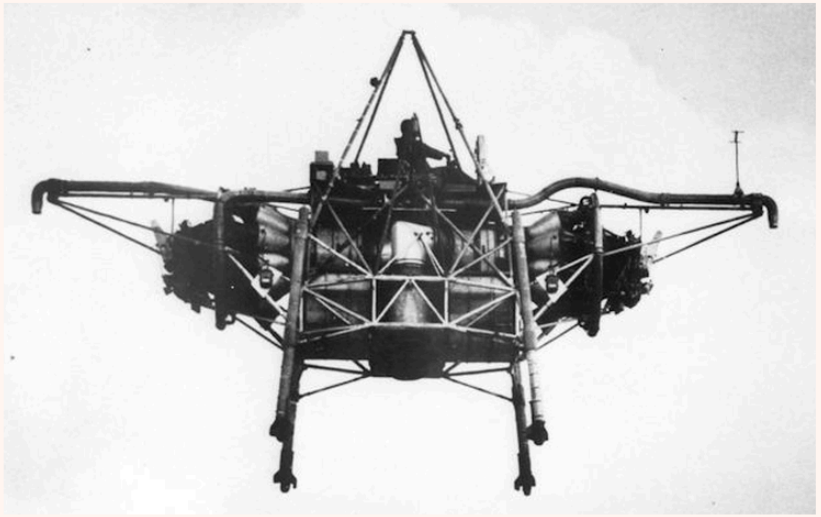

Photograph with FreeCAD projection

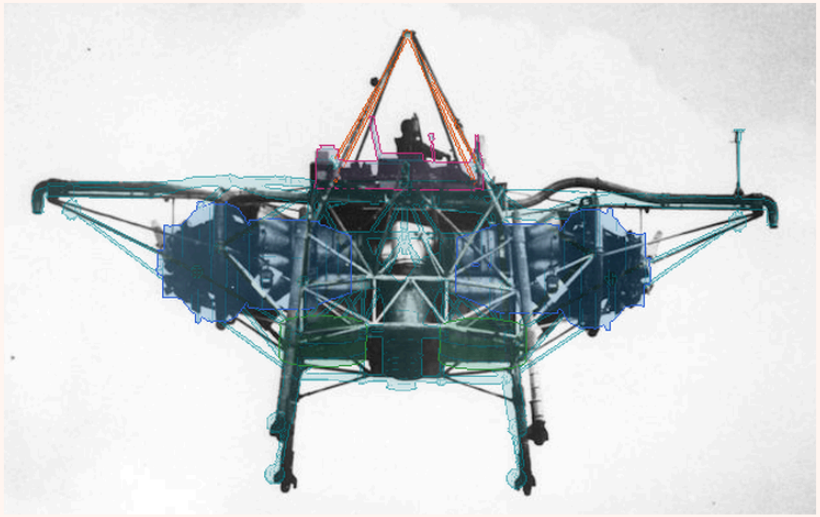

Frame · Pyramid · Cockpit · Fuel[1] · Nene

Apex: -0.5 px

[1] Assumed volumes. Dashed lines show obscured outlines. The pilot belongs to the photograph.

R. A. Harvey · Aeroplane Monthly, March 1985 / TextToCAD · 06.11.2026

Archive photograph and R3 projection overlay. The comparison evaluates outlines in one view. The exact exposure date remains open.

sources/r3_overlay_metrics.json

Sheet 23

F/R blockage • pressure and lift

R11 SIMULATION BASELINE

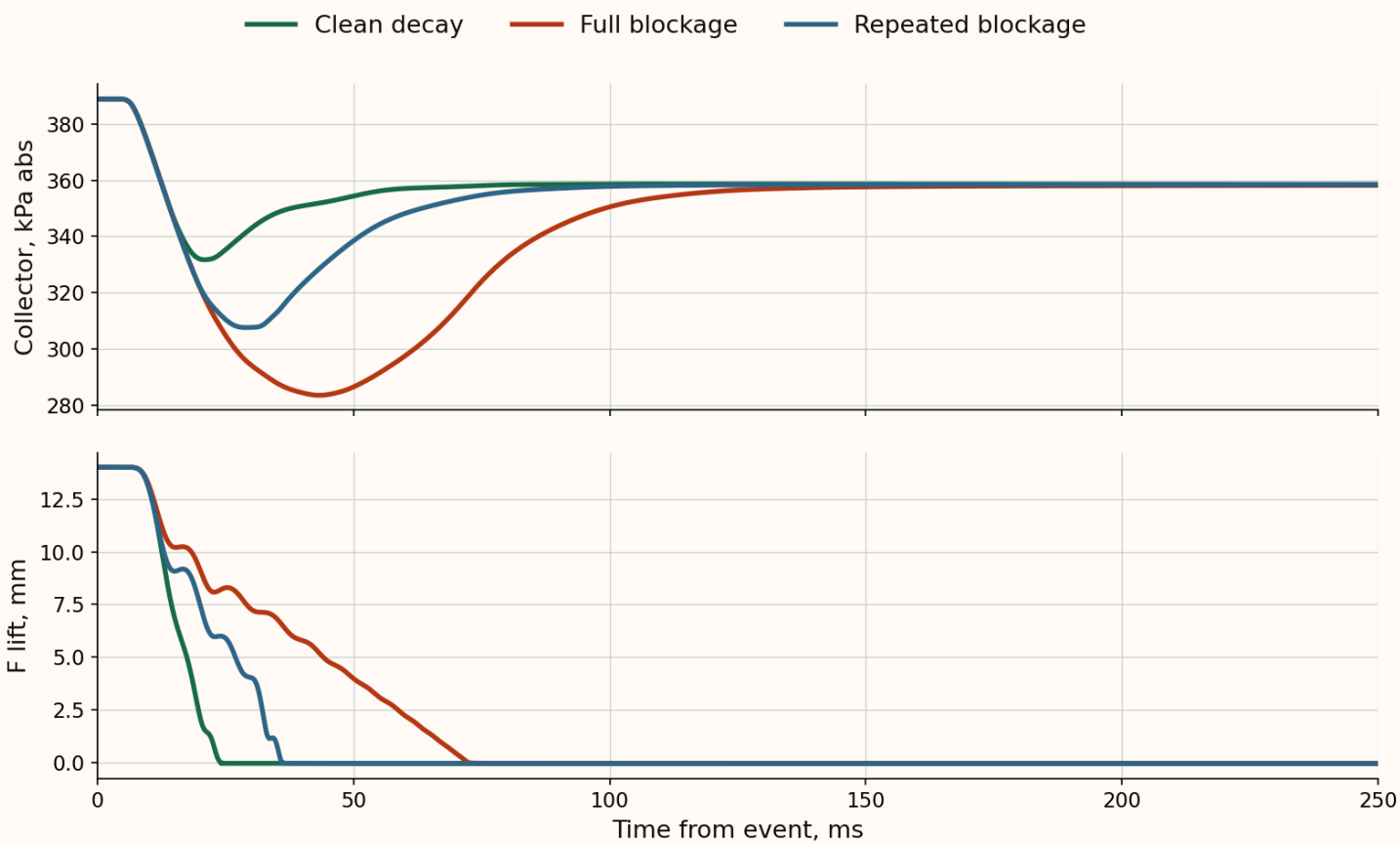

Saved P1 traces. Collector minima are 283.67 kPa abs for full blockage and 307.70 kPa for repeated blockage. F/R collector pressures match.

evidence/thermal_blockage_p1.json

Sheet 24

F/R transient heating

R11 SIMULATION BASELINE

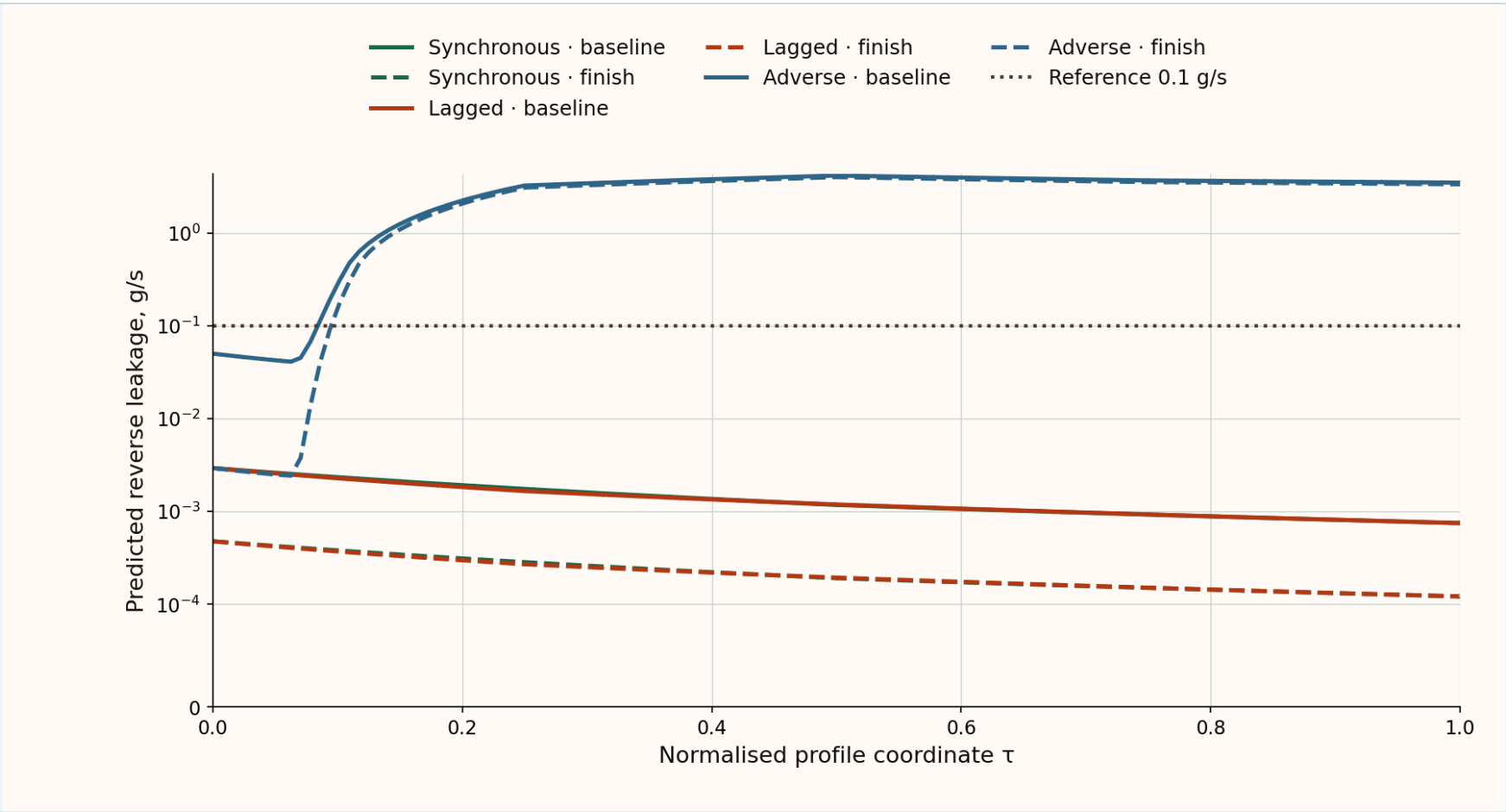

Six R11 profiles. The adverse baseline peaks at 4.146 g/s against a 0.1 g/s reference. The coordinate τ tracks the normalised heating profile.

sources/thermal_p1.csv

Sheet 25

Reinforced G1 touchdown

G1 SIMULATION

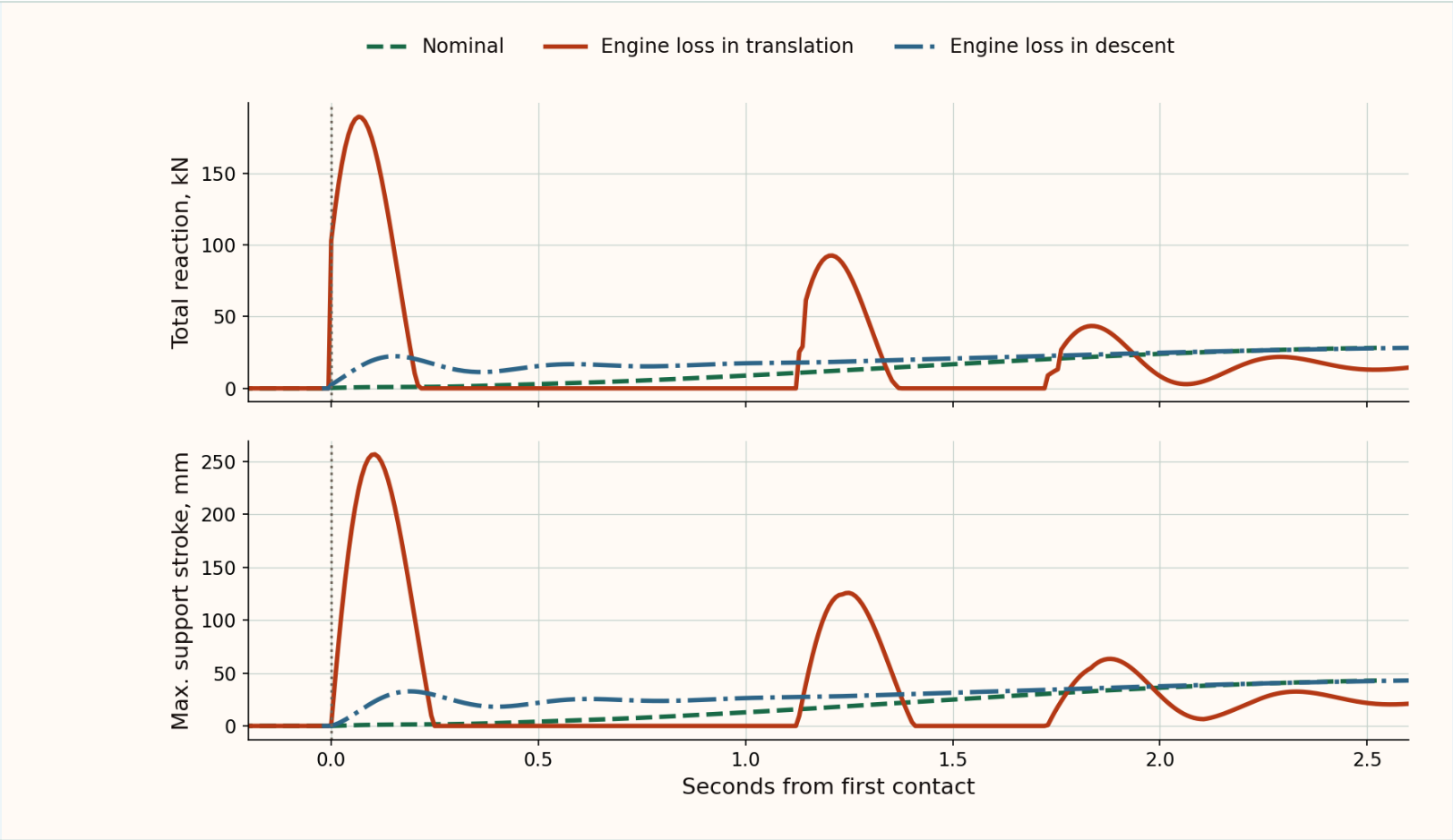

Total vertical reaction and maximum support stroke from first contact. Early loss gives a 189.36 kN peak and up to 257 mm equivalent stroke.

sources/landing_g1.json