Design method for hovering research rigs

How I reconstructed the LLTV and how to apply that experience to five other experimental vehicles. A working guide for designers, analysts and project leads.

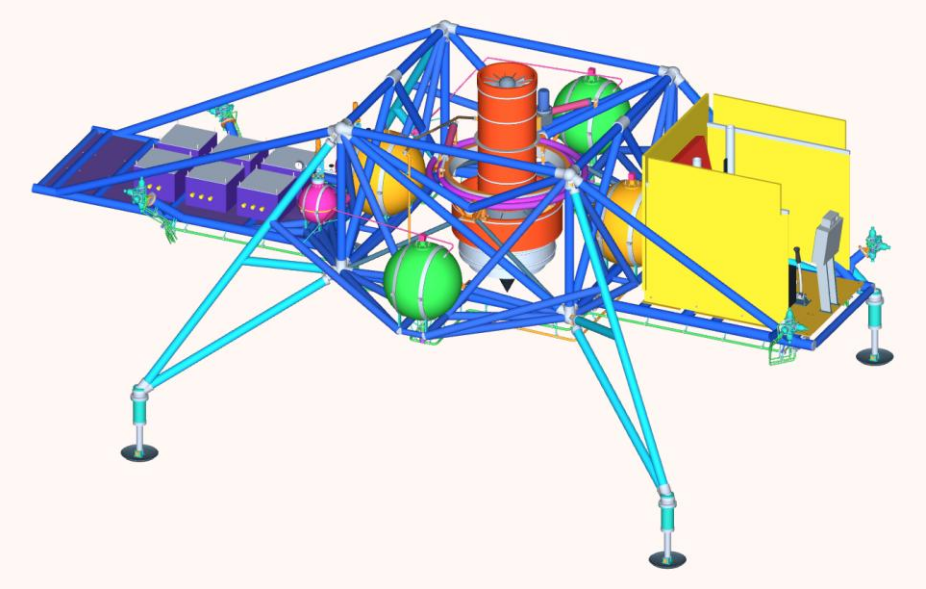

LLTV R4D.1. View of the saved assembly. The cockpit defines the front of the vehicle.

Where to start

The first deliverable answers three questions: which vehicle is being reconstructed, where its lift comes from, and how the pilot commands moments about each axis. If the answers depend on a photograph of a different article or an unknown mass, adding fastener detail will multiply rework.

Reading order: start with the LLTV lessons and worked example, then select the relevant rig. The final sections give release criteria, three reusable skills and a source index.

What I did on the LLTV project

From a reference to an assembly

NASA 952 was the installation baseline. For the centre stick and instrument pedestal I separately used early LLRV-1 photograph E-13115. I compared SP-4535 captions with the test period. The attitude cluster on PDF page 58 and the emergency rockets on page 59 served different purposes. This affected both the assembly tree and the fluid schematic. [1–3]

Which review findings changed the design

The spheres initially had straps, but the load path was unclear. I connected straps to supports and supports to the frame. I then closed the frame, attached lines to identifiable receiving members and separated engine load mounts from gimbal actuators. I checked the deck against the tubes and fitted the end of the aft crossmember to its mate.

In the cockpit I separated the floor stick, ejection handle and instrument pedestal. At the engine I located and mounted two previously floating accessories. I retained the prior revision, recorded the affected object IDs and generated installed and isolated views. A reviewer could then recreate the same pose and visibility.

The result is a digital reconstruction of a defined arrangement. OEM interfaces, operating loads and qualification remain open for a piloted article.

How to use evidence and recover dimensions

Configuration passport

Record the vehicle, article, date or event, operating state and axes. Keep museum, tethered and free-flight configurations distinct. Each claim needs an object, source, locator, status and action to resolve uncertainty. E-13115 documents a stick on early LLRV-1; for a NASA 952 model the same photograph supports an explicitly borrowed feature. [1, 3]

A dimension from a photograph

Rectify perspective using coplanar landmarks when sufficient geometry is available. Use $L = B \cdot p/P$, where B is a known length, P its pixel span, and p the measured span in the same plane. With illustrative B = 1,000 mm, P = 500 px and p = 150 px, L = 300 mm. A ±2 px uncertainty on p contributes ±4 mm from that reading alone. Add reference, perspective and endpoint uncertainties and check an independent dimension.

If the independent dimension fails, revisit the plane and vehicle identity. Do not stretch the complete frame to match one view. For an occluded feature, retain a range and list the interfaces that depend on it, especially the seat height, mount points and thrust line.

Output: a DOCUMENTED / ANALOG / ASSUMED / OPEN ledger, datum scheme and list of dimensions to measure. The evidence skill checks ledger structure; the author verifies what each source actually supports.

Layout and structural interfaces

Start with axes and hardpoints

Set the ground plane, engine axis, symmetry planes, pivot centres, landing points and seat. Collect them in one parametric skeleton. Attach engine and tank envelopes, gimbal extremes and the pilot envelope. Make it visible which parts move with the engine, which remain on the frame, and where a line crosses that boundary.

Three chains a reviewer can trace

Structural: unit → pad → lug → pin or bolt → mating member → truss node. Flow: tank → regulator or valve → line → movable section if required → consumer inlet. Control: pilot input → sensor and logic → actuator or valve → force and moment. Record both end IDs, axis, medium, travel, load and evidence in the interface table. Include retention and the removal path.

How to detail a joint without inventing precision

Define the mating surfaces and a common hole axis first. Then model the pin, lugs, washer and retention or the appropriate bolt stack. Check wrench access and removal clearance. Undocumented material, fit and torque become contractor requirements. Reorienting a cylinder seam for presentation must preserve its axis, seats and actual joints.

Efficiency check: moving a support should update both mating parts and the line port. If dozens of bolts need individual edits, repair the dependency before adding detail.

Mass thrust and control moments

Units and reference point

Use a right-handed frame with +Z upward. Store each mass m_i and position r_i in metres. The centre of mass is $rG = \Sigma m_i r_i / \Sigma m_i$. Evaluate empty, piloted, initial fuel, depleted fuel and asymmetric residual cases. LLTV uses one 285 kg engine allowance; its teaching solids must add no duplicate mass. Catalogue, installed and CAD-shell masses serve different purposes. [2]

For forces on the vehicle, $Fnet = \Sigma F_i + (0,0,-mg)$, and $M_G = \Sigma[(r_i - rG) \times F_i + C_i]$. C_i is an applied free couple. Static hover requires both residuals to approach zero within input accuracy. Vertical thrust-to-weight alone cannot establish control authority on every axis.

Worked sign check

An illustrative rig has 60 kg at x = −0.4 m and 40 kg at x = +0.6 m, with y = z = 0. Thus xG = 0. Two upward forces of 490.3325 N at x = ±0.5 m balance weight and cancel their moments. Transferring 20 N from the left exit to the right keeps total thrust constant but gives My = −20 N·m. A +20 result calls for checking the cross-product order and force direction.

Dynamics additionally requires inertia, force versus command and condition, delays and limits. Sweep CG uncertainty; in a simple case $\Delta M = \Delta r \times F$ with the lever-arm sign stated explicitly.

Subsystem calculations and their scope

Control and fluid circuits

Perturb each independent input by ±δ at one operating point and recompute the wrench from every affected exit. The corresponding control-matrix column is the difference of those six-component results divided by 2δ. State input units, bounds and saturation; repeat at several thrust settings. Zero authority or a reversed sign calls for checking axis, lever arm and valve logic.

For compressor bleed record inlet and branch flows, temperatures, pressure losses and the simultaneous change in main thrust. For rocket circuits separate pressurant from liquid propellant. For ejectors define the control volume, induced air and ground boundary. Assess steady and transient demand separately.

Local strength and landing

The LLTV helium-sphere design assumes a 9 mm nominal and 8.5 mm minimum wall. At 20 MPa the minimum-wall model returned 191.6 MPa inner-surface von Mises stress. That result applies to the sphere. Neck, weld, preload and seal need separate load, tolerance and material models. For landing, ½mv² sets the energy scale; examine single-leg contact, retained thrust, stiffness, damping and travel stops.

Keep condition, units, assumptions, input revision and acceptance criterion with each result. Static strength, flight stability and service life remain distinct checks.

How I checked corrections in FreeCAD

Turn a screenshot into a reproducible check

Record the part, neighbour, pose, camera and visible groups. In the saved assembly obtain world placements, check solid validity, and measure both distance and intersection volume. Zero distance occurs in correct contact and in penetration; common volume distinguishes the two. For a pin or bearing, also check axes, seating faces and required clearance.

On the CF700 aft rotor I replaced placeholders with 54 individually solid bluckets, each rooted in its own slot. I checked adjacent blades and the disk, corrected a local interference, then separated the study views into an empty slot and one complete blade. The neutral check covered 154 internal and 17 existing engine features; no pair exceeded 0.05 mm³ intersection. The angle test returned +27°, −27° and 0° for the rotors and stator.

When a digital change is closed

Close, reopen and repeat the selection. Distinguish installed assembly, static cut and exploded study. R4D.1 recorded 3,711 visible occurrences and 4,651 solids. Reimport after conversion of coloured STEP to AP242 preserved the solid count, volume, bounds and palette. The package records pose, tolerance and SHA256. Hash verification checks the integrity of the issued files.

For moving parts report minimum clearance and its pose. A few sampled angles and rotor-phase checks do not establish continuous hot-running clearance, vibration endurance or fitness for flight.

Germany · SG 1262

What the rig represented

VFW studied control of the future VAK 191B using an open truss and five vertical RB.108 engines. The centre three represented the vertical thrust of the lift/cruise engine; the forward and aft units represented the aircraft lift engines. Control jets formed another part of the system. This was functional similarity; the aircraft had a different airframe and engine installation. [4, slide 39]

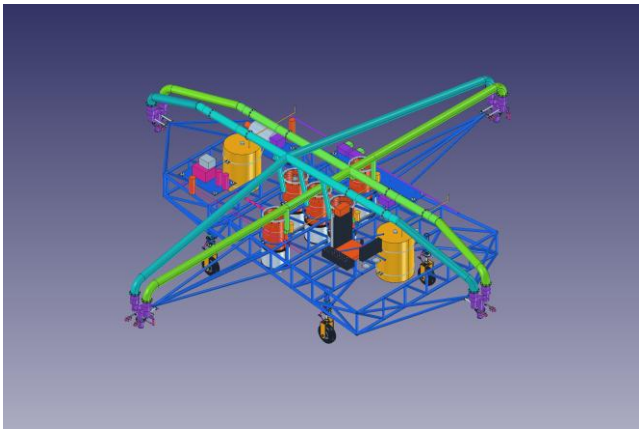

Actual SG 1262 R3 model from the project collection. Equipment positions are reconstructed.

Give every engine its own ID, axis, mass, mounts and bleed branch. Keep ground equipment separate. Build a command-to-thrust-to-moment matrix, then examine an engine-out case and the CG shift as fuel is consumed. Freeze interfaces after reconciling thrust and moments, including bleed penalties.

The local SG R3 delivery includes reports on reopening, air-path continuity and six travel positions. Identify the FCStd by its hash first. These results apply to R3 and to the recorded positions.

Lift	5 × RB.108 → vertical forces
Control	Commands → engines and control jets → moments

USSR · Turbolyot

Main exhaust and outboard controls

For the 1956–1959 programme keep separate flying-article and museum records. A witness describes a vertical engine, cockpit, trusses and two vanes downstream of the nozzle; deflection changed the direction of the main exhaust. A reaction jet provided directional control. The museum record names an RD-9BP and Yuri Garnayev's Tushino demonstration on 20 July 1958. Engine identification for an earlier sortie requires separate evidence. [5, 6]

Recover the control chain

Start with the engine axis and nozzle exit plane. Model distinct effectors: a deflecting surface in the hot stream and an outboard jet at its own lever arm. For each record the input, outlet, moving element and reaction on the frame. Compare force direction to the photographed pivot. If accounts differ on roll and pitch allocation, keep competing mappings and request an actuator drawing.

What to test first

Evaluate installed lift under vane deflection and bleed demand separately. At low height investigate the reflected plume near the intake and cockpit. The eyewitness describes dust and debris raised by the jet. An unobstructed inlet in CAD does not determine gas temperature or compressor stability margin. [5]

Measurement request: vane pivot axes, actuation linkage and end positions; provenance of later stabilising surfaces. Keep those features provisional for the selected period.

Lift	Vertical turbojet → lift
Control	Exhaust vanes; separate reaction control

United Kingdom · Thrust Measuring Rig

Two engines and three exits

Distinguish the 1953 tethered lift, the 1954 free flight and the RAE test configuration in the 1953–1957 period. Two Nenes were installed back-to-back. The forward engine duct bifurcated to exits flanking the aft engine's central exit. Each engine resultant passed through the design CG. Use the air-control diagram to establish the outboard control paths. [7, sections 2.1–2.2, figures 3–4; 8]

Check against the reported figures

RAE reports about 7,600 lb weight and 8,100 lb maximum thrust including control jets. Their ratio is 1.066, consistent with the reported rounded 1.07. Converting numerator and denominator consistently to newtons preserves the ratio. Do not add control-jet thrust a second time. Hot-gas recirculation reduced the practical margin at take-off. [7, section 2.1]

Perform two independent engine-out checks: moment about the actual CG and residual vertical force. A small overturning moment does not sustain hover. For landing, consider vertical velocity, remaining thrust and stroke. Use the RAE stabilisation measurements only for their reported test configuration.

First CAD check: both engine axes, all three exits, load frames and CG in one view. First calculation: the two engine resultants, then the reactions in both forward-duct branches.

Lift	Two Nenes → three exits → two resultants
Control	Bleed air → outboard control jets

France · SNECMA C 400 P 2

Fix the variant

Target the piloted P.2 during Auguste Morel's free flight on 14 May 1957. Check the vertical Atar 101 DV, seat at the top, four wheeled supports, jet deflection and gas-jet stabilisation. The museum gives 8.34 m height and 1.50 m diameter. The project and a museum-photo caption use F-ZWUZ; AAMS gives F-ZWWZ. Retain both as sourced readings pending a dated registration record. [9–11]

Why the vertical arrangement matters

Reference the seat, pilot mass, tank and engine axis to one vertical datum. Project the CG onto the support polygon and examine tilt or compression of a single leg. Separate rotation about the vertical axis from rotation about either transverse axis. Historical channel names on a vertical vehicle can differ from horizontal-aircraft conventions. Draw the axes used in the control matrix.

Represent thrust deflection by its function first: a commanded direction produces a transverse force and a moment about the CG. The external fairing cannot establish the mechanism. Obtain a section drawing and P.2-specific evidence before modelling actuators. Exclude P.1 hardware, the P.3 cockpit and the C.450 annular wing unless separately justified.

First layout acceptance: show axes, seat envelope, four supports, CG and thrust lines for two deflections. The gantry and restraints belong to a separate ground configuration.

Lift	Vertical Atar 101 DV → main thrust
Control	Jet deflection and separate gas-control paths

France · SA 610 Ludion

Article 002 and a specific flight

For the 1967–1968 programme I select Ludion 002 on its final free flight on 20 December 1968. Rothmund records five free flights over 18–20 December. He reports 190 m in 32 s, 59 km/h and a 20 km/h headwind for the final flight. Distance divided by duration gives an average groundspeed of about 21.4 km/h. Keep the quantities in separate fields: the type and measurement interval of the 59 km/h speed remain unspecified. [12]

What belongs in the CAD tree

Start with the pilot's mass and position, compact frame and two ejector passages. Distinguish primary generator gas from secondary air entrained by the ejectors. Represent the moving thrust assembly, reactions at its supports and intake/outlet heights above ground. Give the second channel its own ID and direction even if mirrored from the first. [12, 13]

Define the thrust control volume around the entire ejector assembly. If using measured total thrust, primary-nozzle thrust is already included. Request a map versus flow, ground height and inclination, plus thermal protection and motion limits. A control review needs the assembly response to a command, rather than a constant multiplier on generator thrust.

Separate configurations: ground simulator with external air, tethered article, and 002 in free flight. Similar images do not establish identical flow, mass or restraints.

Lift	Primary gas + induced air → ejectors → thrust
Control	Thrust-unit attitude → force direction and moment

How to organise fast iterations

Run an inexpensive experiment before detailed assembly

Prioritise the unknown with the largest consequence. If the thrust line is uncertain, vary its lever arm in the analysis first. If bolt clearance is doubtful, model the two mating parts, washers and access envelope. If a projection causes confusion, separate the views while retaining installed geometry. Each experiment should answer one question and be reproducible from a saved file.

Use a common parametric driver for repeated parts: support prototype, pipe path or rotor pitch. Keep mirrored occurrences individually identifiable and verify orientation and ports. In each revision recompute affected mates and one previously working reference case. Use inexpensive bounding-box screening first as the test set grows; verify candidate collisions with exact solid operations.

Reusable work request

Use “article / state / revision; evidence and locator; view and part IDs; physical question; permitted changes; measurable criterion; deliverables.” For example: “R4D.1, neutral. The extracted blade hides the empty slot in the study. Change the view. At first open show the sector and six neighbouring roots with the whole blade hidden separately. Verify saved visibility after reopen and provide one image.”

Measure time to an accepted correction, repeated reopenings that reveal the same defect, and the share of assumptions with a verification action. The project has no measured speedup for these five programmes.

From reconstruction to a contractor brief

Hand off a specific assembly

A contractor pack identifies the assembly and parent revision, datums, mating items, interface geometry, loads and ranges, temperature, life, service constraints and required records. State what the customer controls, what the supplier may propose and who accepts deviations. For an engine request installation drawings, thrust maps and mount reactions; for a vessel request material, weld process, inspection and test records; for gear request force–stroke data and energy capacity.

Criteria for moving to the next stage

Archive to layout: identify variant and condition and assign each uncertainty. Layout to detailed design: baseline masses, loads, control inputs, interface documents and analysis revision. Design to fabrication: approve drawings, materials, tolerances, processes, inspection and acceptance methods. Fabrication to tests: establish article identity, measure mass and CG, and review rigs, failure cases and release authority. Record the evidence, owner and decision at each transition.

For a piloted article trace each hazard to detection, system response, test and outcome. Examples include lift loss, actuator seizure, gas leakage, hot-gas ingestion, power loss and command loss. A piloted release or a production decision belongs to the programme for the particular article.

Group purchasable units by contract scope. Dozens of engine solids can represent one purchased assembly. Keep missing prices open until quoted.

Using the skills on the next project

1 texttocad-vtol-evidence

Prompt: “Use $texttocad-vtol-evidence for C.400 P.2. Separate evidence of free flight from evidence of registration. Return CSV, page locators and the next archive request.” The two claims can have different confidence levels. The skill includes a small LLTV ledger.

2 texttocad-vtol-balance

Prompt: “Use $texttocad-vtol-balance for TMR in its RAE condition. Represent two engines and three exits; flag unknown flows. Return residual force, moment and required measurements.” The included JSON example is illustrative. Replace its masses and forces and give coordinates in metres for a real project.

3 texttocad-vtol-feedback

Prompt: “Use $texttocad-vtol-feedback for the marked attachment. Measure neutral and extreme-position clearances, check projection overlap separately, reopen the saved revision and provide FeedBack.” For an extracted LLTV R4D.1 release the helper checks SHA256 and receipt consistency. For SG 1262 use the receipts of its own revision.

The skills are installed in the user Codex skills directory. In a new chat invoke a skill by its $ name. Portable copies are in the methodology archive. The helpers use the Python standard library and do not modify their inputs.

Sources and records 1

[1] NASA SP-4535 · Unconventional, Contrary, and Ugly

PDF pages 58–59, 74 and 87; captions and early cockpit.

[2] NASA TN D-3023 · Bellman & Matranga

Figure 25 and table III; vertical CF700-2V.

[3] NASA · Lunar Landing Training Vehicle NASA 952

Surviving installation, engine and gimbal photographs.

[4] German V/STOL Fighters · International Powered Lift Conference

Slide 39, SG-1262 Hovering Rig.

[5] Глава 9 · Вертикалки. Страницы почти забытой истории

Witness account of LII, exhaust vanes and test issues.

[6] АМНИТ · Виртуальный музей памятников науки и техники

Turbolyot entry; engine designation and 1958 demonstration.

[7] J. K. B. Illingworth · Flight Tests of a Hovering Jet-Lift Aircraft

R&M No. 3336, sections 2.1–2.2 and figures 3–4.

Sources and records 2

[8] Science Museum Group · Rolls-Royce Thrust Measuring Rig

Tethered and free-flight chronology.

[9] Musée de l’Air et de l’Espace · C 400 P-2 ATAR Volant

Exhibit type, dimensions and engine.

[10] AAMS · Auguste Morel, pilote d’essai

Pages 20–21, P.2 free flight, controls and F-ZWWZ identification.

[11] Museum photograph · C.400 P2 F-ZWUZ

Photograph caption, separate from a registration record.

[12] C. Rothmund · The Propulsion System for the Ludion One-Man Hopper

Author-uploaded text IAC-08-E4.3.6: article 002 results and original Sud Aviation / SEPR memo references.

[13] AAMS · Prendre l’air No. 4

Gas generator, two ejectors and moving thrust assembly.

Project evidence

LLTV R4D.1: verification/reopen.json, verification/internal_interfaces.json and calculations/AP242_roundtrip.json. SG 1262 checked baseline: R3_20261105/delivery_validation.json. The working-folder specifications numbered 6, 14, 18, 22 and 28 were used as finding aids; their assumptions remain assumptions.