Front three-quarter view

CAD R5 · 01

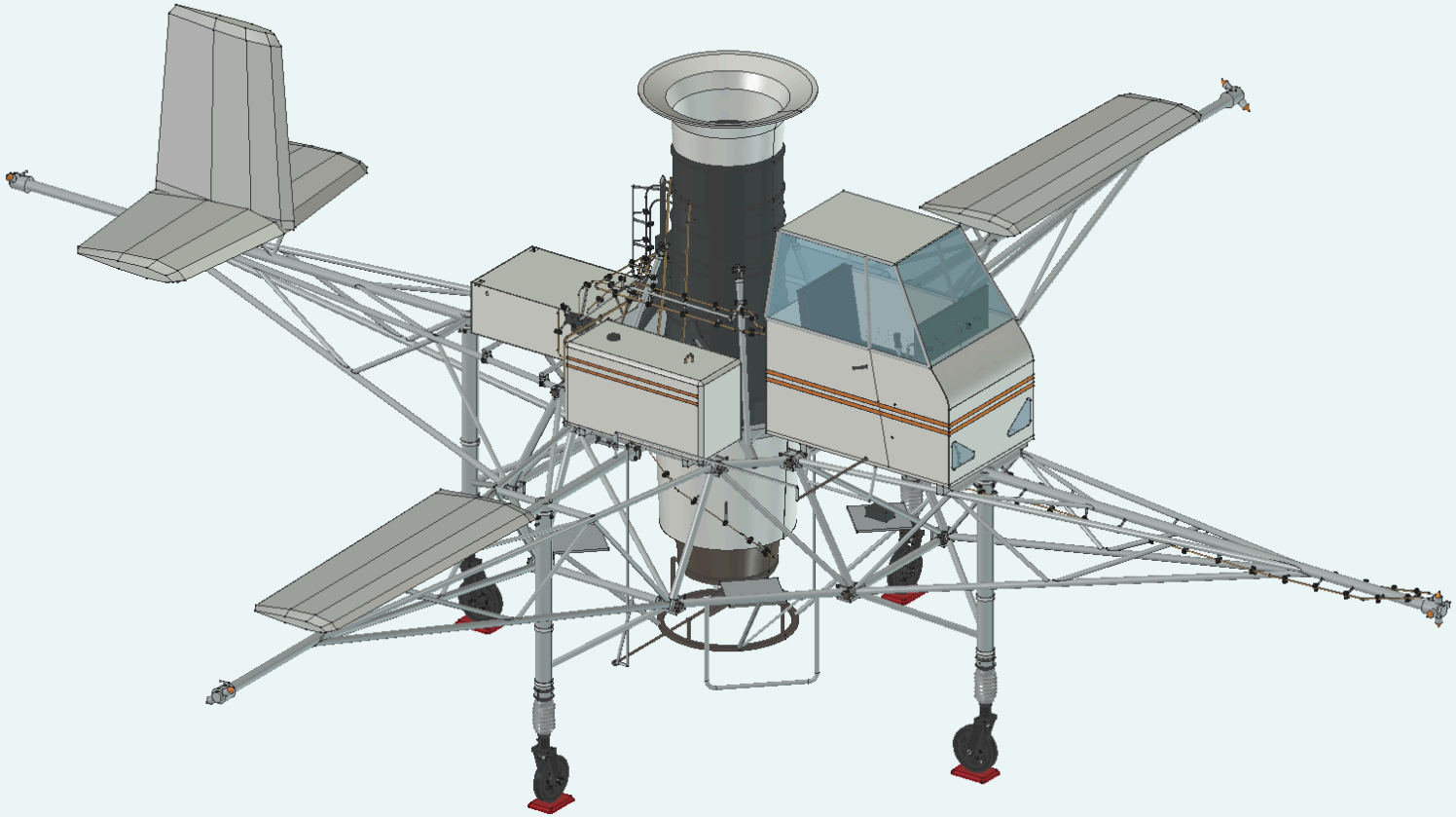

The museum assembly rests on four supports. The vertical engine, cockpit, truss, tail and red display pads are visible.

Rear three-quarter view

CAD R5 · 02

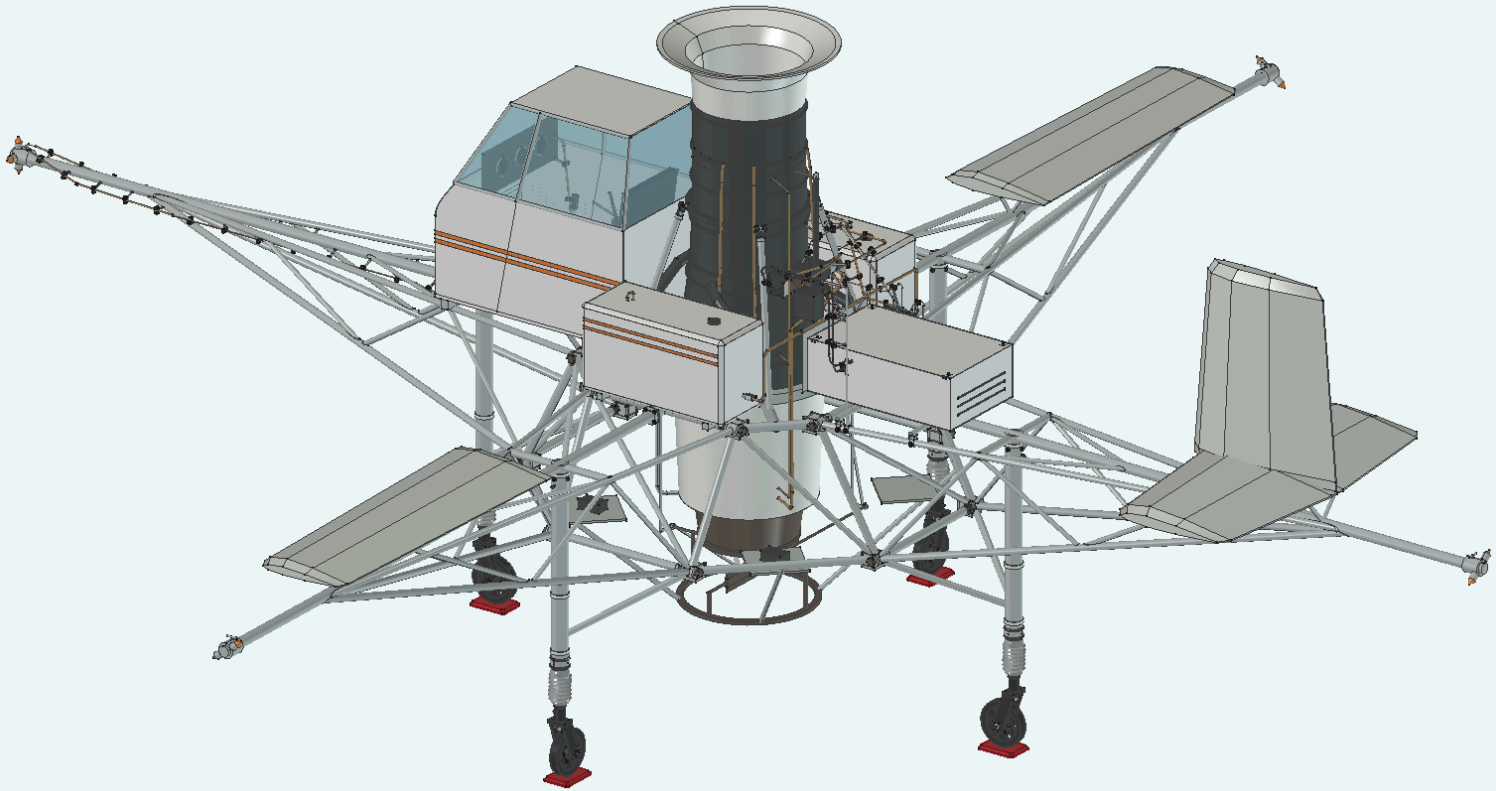

The fin, tailplane and side surfaces are shown in R5 CAD. Historical tail contours and incidence angles remain OPEN.

Plan and layout axes

CAD R5 · 03

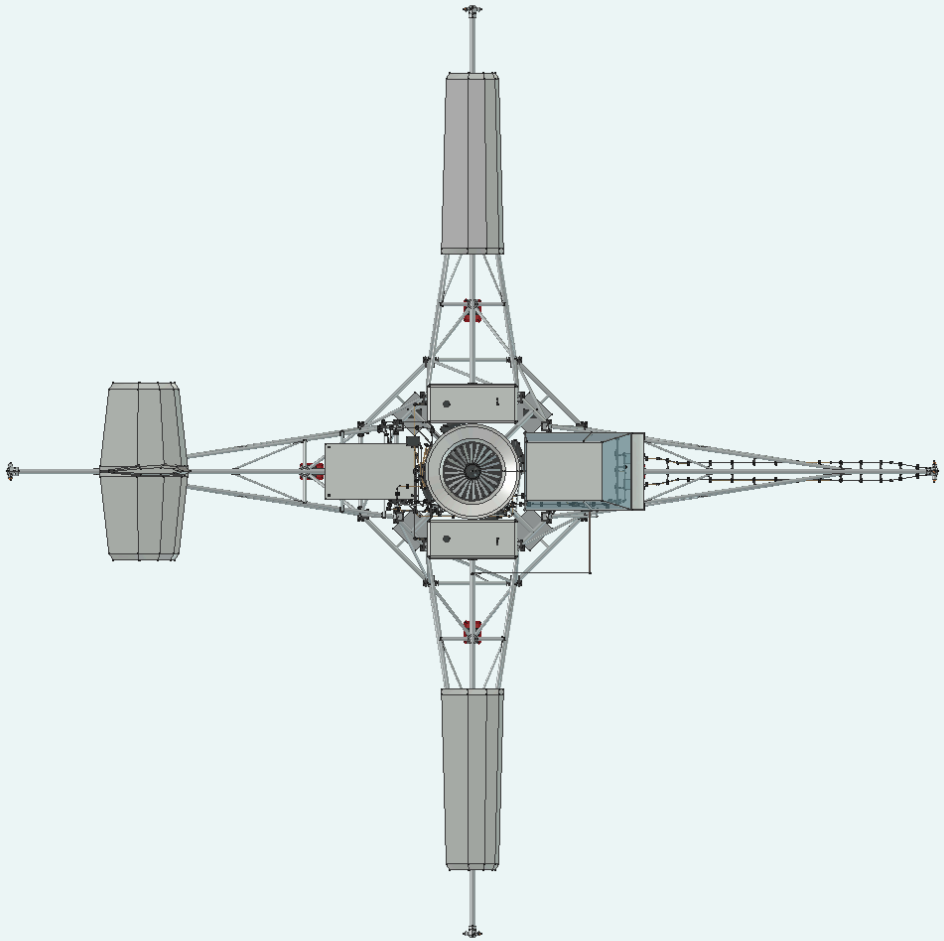

Top view. X points toward the cockpit and Y points left. The visible CAD plan envelope is 10,000 × 10,000 mm.

Profile and support span

CAD R5 · 04

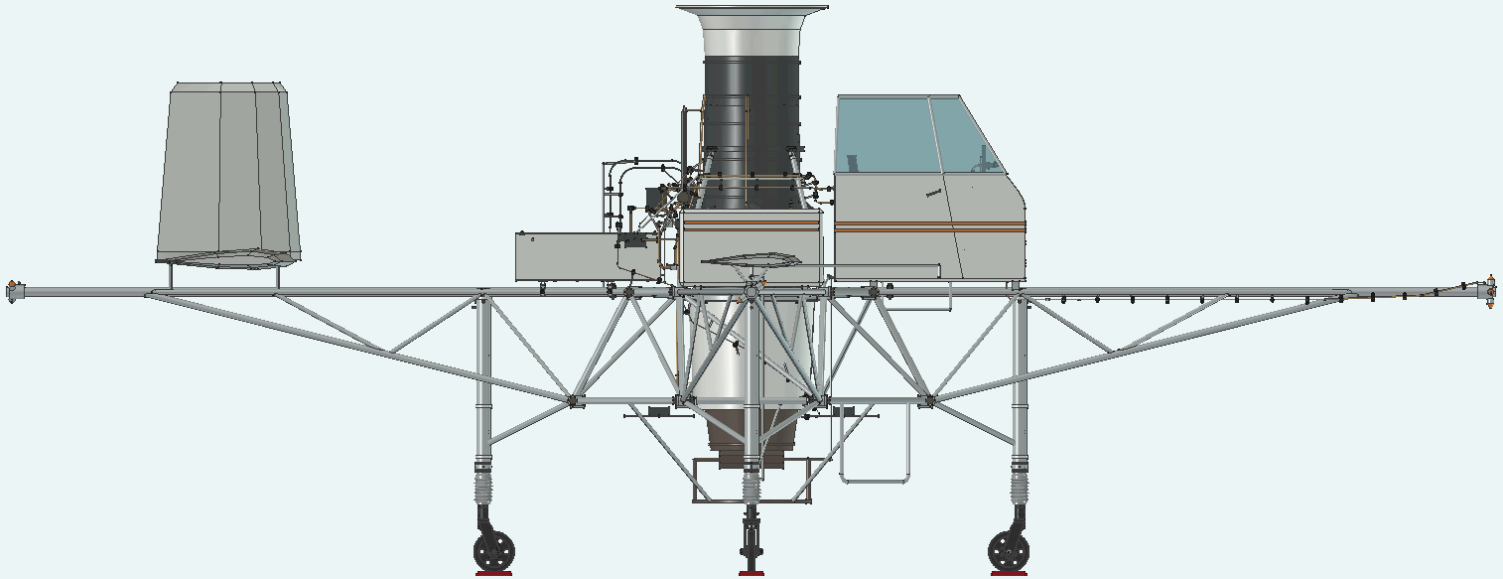

The visible museum CAD assembly is 3,820.809 mm high including the pads. Opposed strut axes are 3,600 mm apart. Museum measurements remain OPEN.

Assembly build-up

CAD R5 · 05

Truss and booms

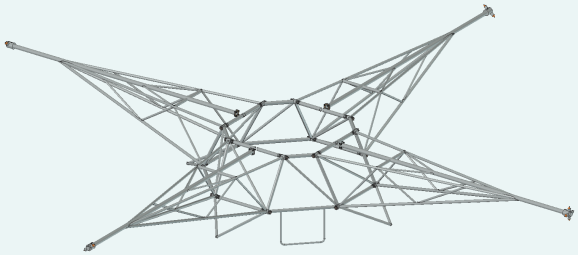

Equipment and supports

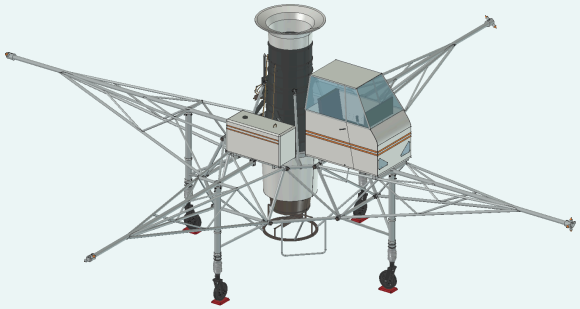

Complete R5 assembly

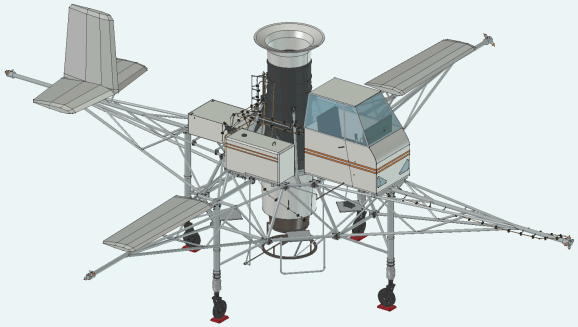

The truss, main equipment and complete assembly share one orthographic camera. The sequence explains how the assembly is organised.

Subsystem exploded view

CAD R5 · 06

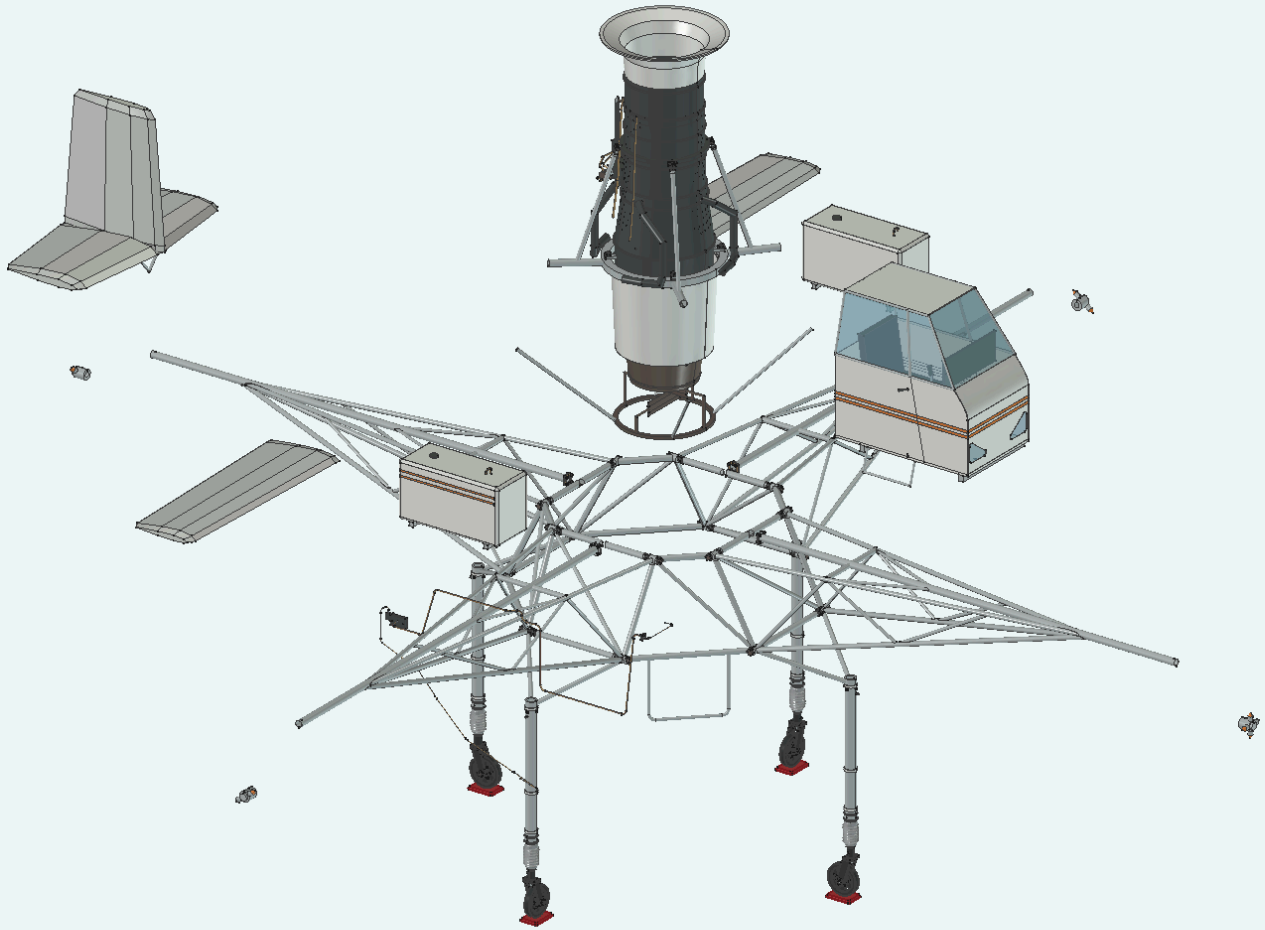

Offsets for the engine, cockpit, tanks, supports, tail, tip nozzles and wiring are recorded. The separation explains layout; the removal sequence remains OPEN.

Longitudinal assembly section

CAD R5 · 07

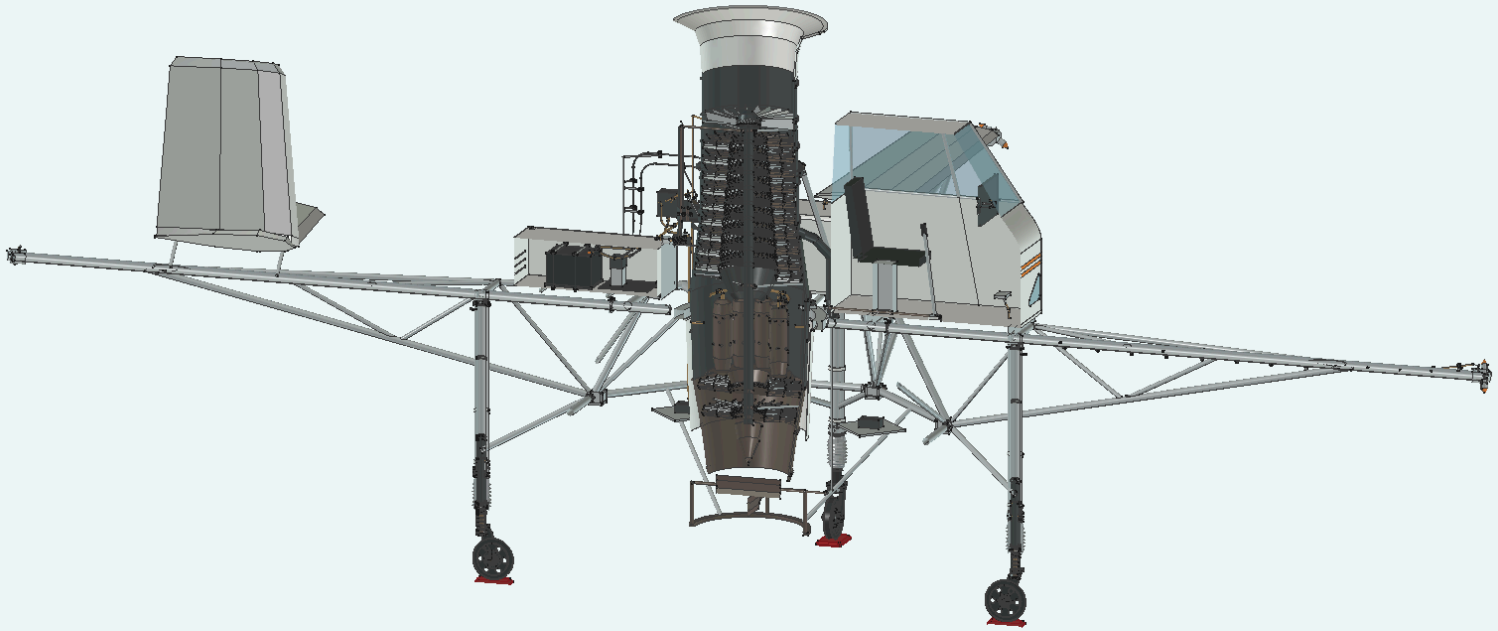

Native FreeCAD view clipped at Y = 0 mm, retaining Y ≥ 0. The plane passes through the engine axis and the cockpit longitudinal plane.

Engine exterior and section

CAD R5 · 08

Exterior

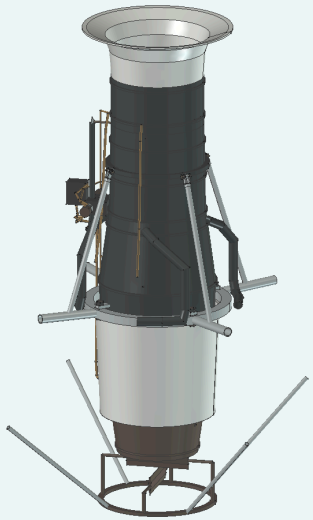

Section Y = 0 mm

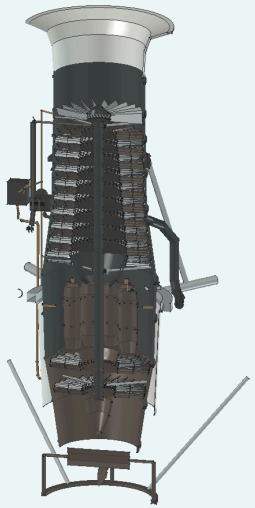

Both views use the same part selection and scale. The right view is clipped at Y = 0 mm, retaining Y ≥ 0. Internal geometry is reconstructed; the RD-9BP/BL engine record remains OPEN.

DEMO · R5 manual control and landing · Video in the HTML atlas

00:13 Jet vanes · 00:21 Front boom nozzle · 00:29 Side boom nozzle · 00:44 Approach and landing

OPEN · Vane angles and effectiveness, nozzle operation, gas and fuel flow, hover endurance and range.

Tanks and fuel supply

CAD R5 · 09

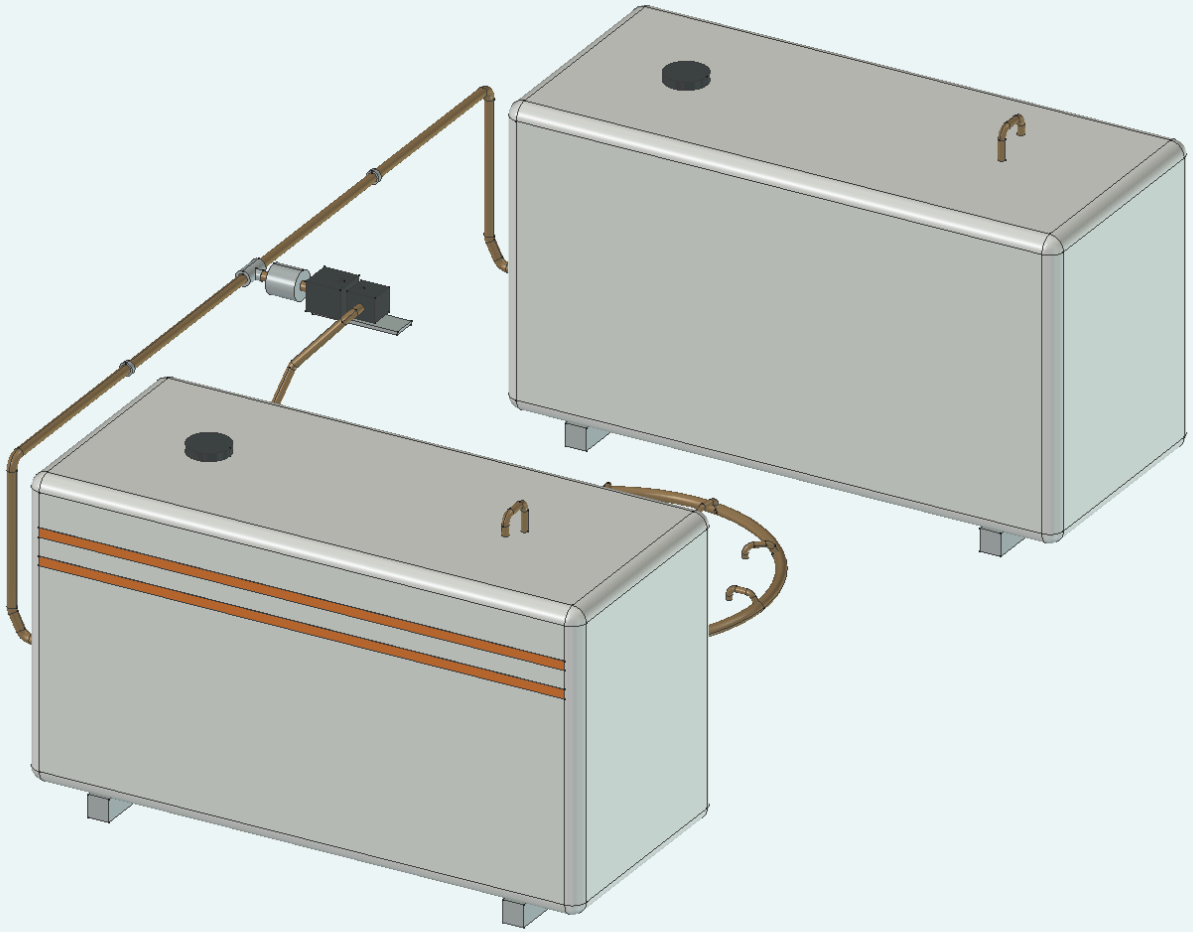

Tank bodies and modelled fuel lines are shown. Published historical tank capacity is 400 L. Usable fuel, remaining fuel and reserve for R5 remain OPEN.

W2 support and display details

CAD R5 · 10

W2 strut

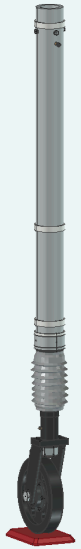

Boot, wheel and pad

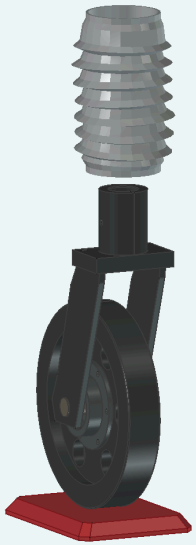

The boot, wheel and red pad are shown in the neutral pose. The W2 axis is unchanged. The detail view uses its own scale.

Sensor run and connection

CAD R5 · 11

Isolated instrument run

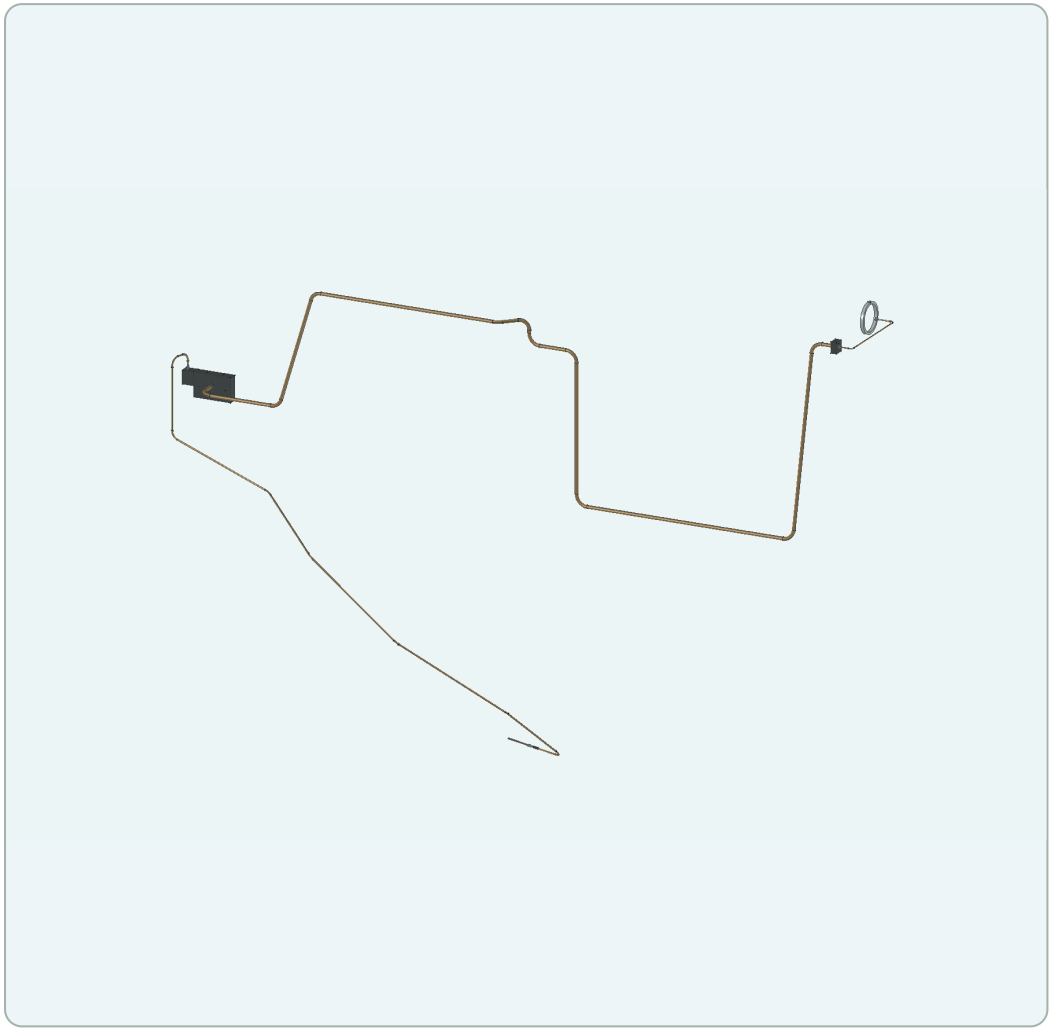

Probe and coupling



The exhaust-temperature signal runs from EGTProbe through the cable and junction to the instrument. R5 models three loom cores and fittings. Pin assignments, wire sizes and thermal rating remain OPEN.

Tip nozzle and exhaust vanes

CAD R5 · 12

W2 nozzle assembly

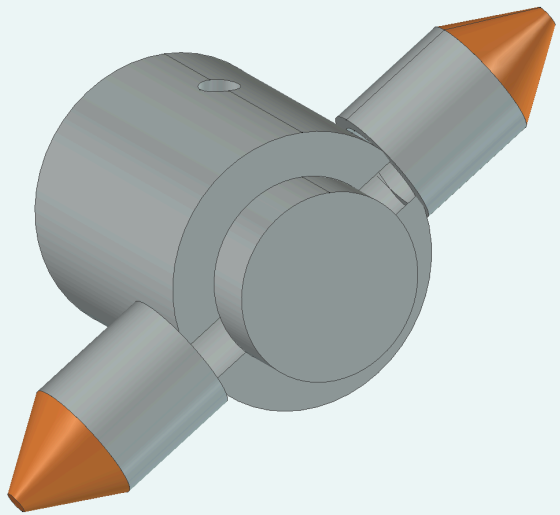

Engine exit and exhaust vanes

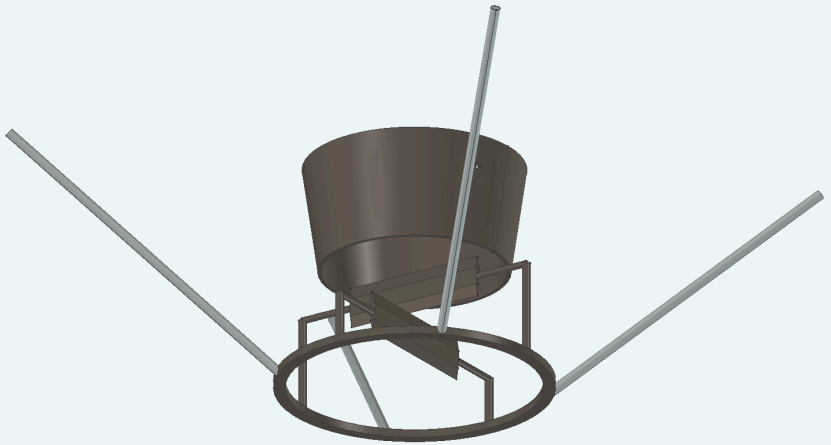

Close-ups show the W2 tip assembly and the control elements by the engine. Actual control response and bleed flow remain OPEN.

Monino on 30 May 2013

PHOTO · 13



Museum reference photograph. Clemens Vasters, Vasters 2200, CC BY 2.0. Metric checks need a reference scale in each datum plane.

Simulated flight cycle

DEMO · 14

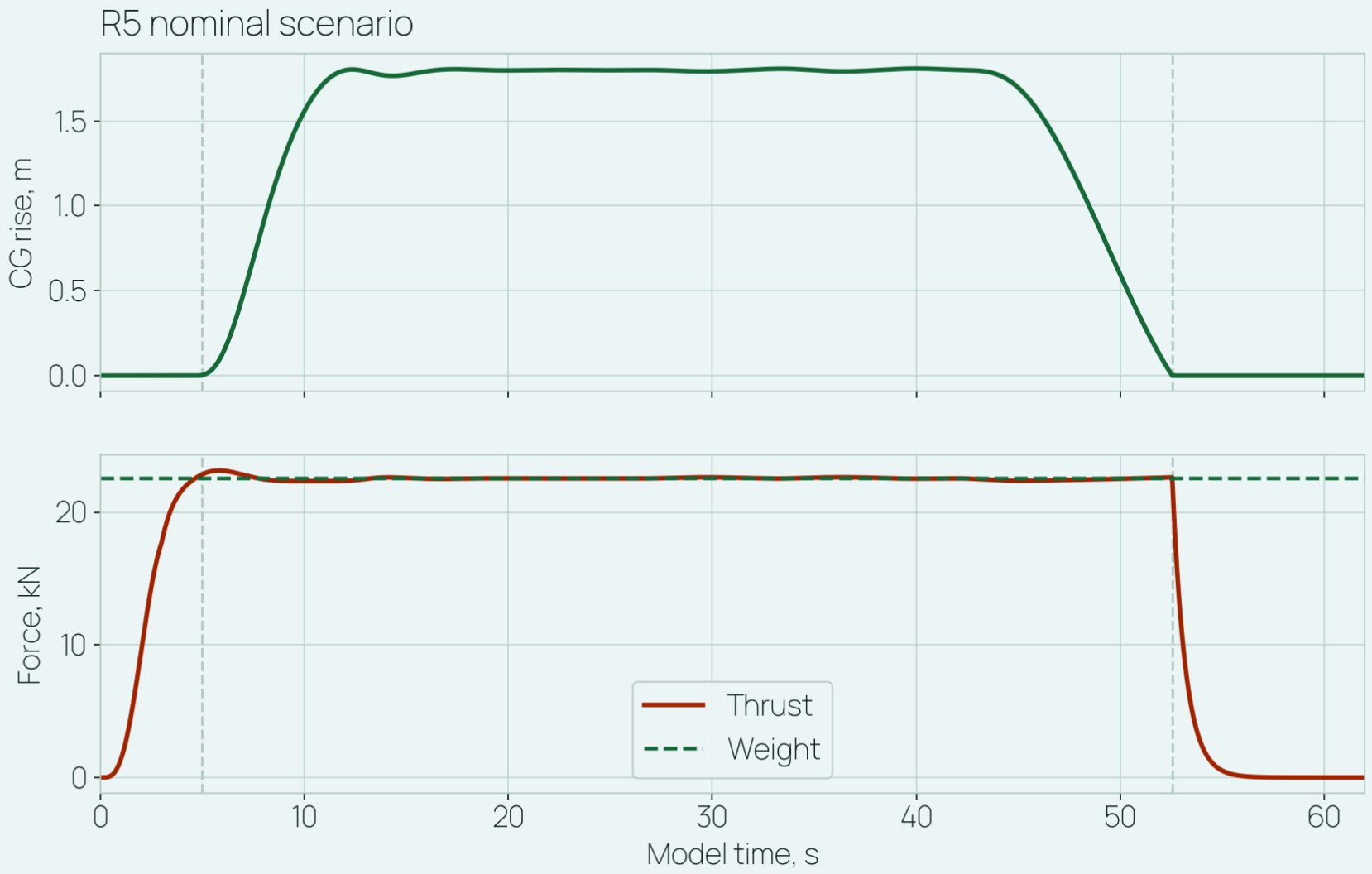

DEMO R5 Flight R1. Liftoff at 4.98 s and contact at 52.55 s. Airborne for 47.57 s with a peak rise of 1.808 m. The curves come from the saved telemetry.

Fuel, hover and range

OPEN · 15

Historical publications		R5	
Total tank volume	**400 L**	Hover fuel flow	**OPEN**
Historical fuel load	**350 kg**	Usable fuel and reserve	**OPEN**
Free sortie in the 1957 series	**about 6 min**	Sustained hover duration	**OPEN**
		Fuel-limited range	**OPEN**

Hover fuel flow, usable remaining fuel, endurance and range for R5 remain OPEN. The published historical fuel load is 350 kg; its corresponding remaining fuel is unknown.

First open and CAD files

CAD R5 · 16

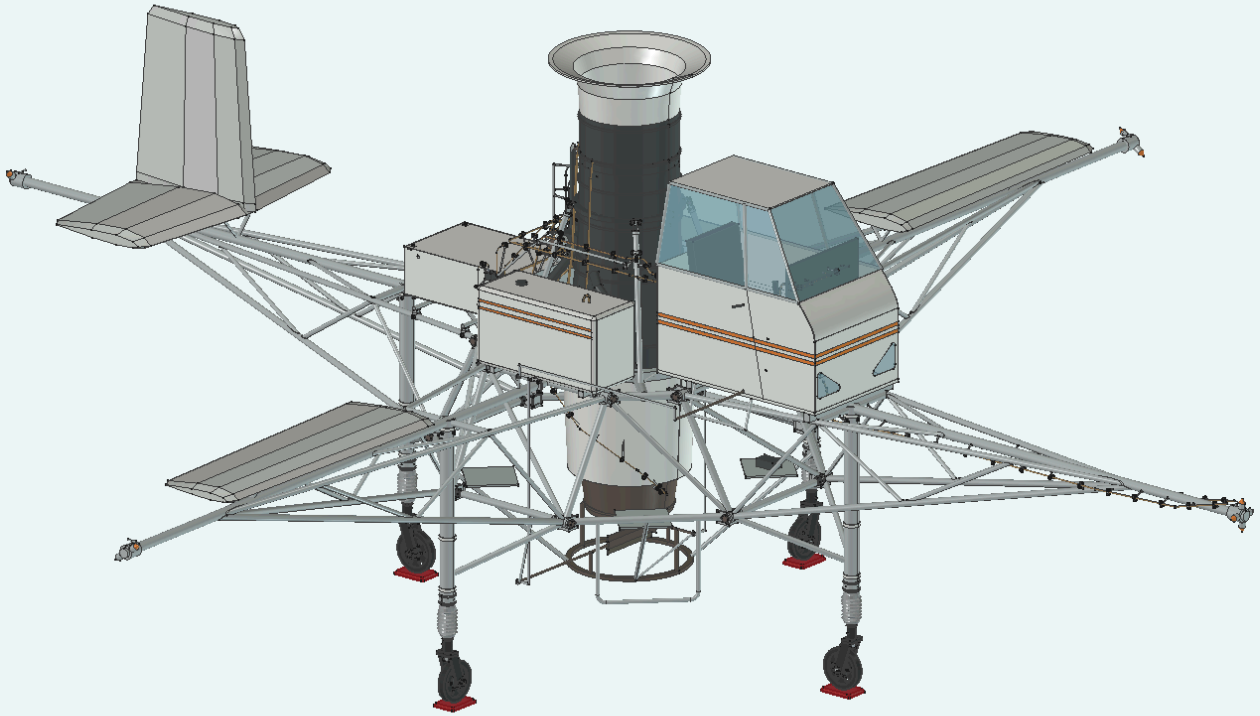

Captured in a separate FreeCAD process before camera or visibility settings were changed. Both themes show the saved state of the same model.

Simulated flows and forces

DEMO · 17

Flows

TEXTTOCAD TURBOLET R5 / FLIGHT

Main thrust and bleed branch

Historical flow-path principle · equivalent effects in the R5 simulation

Main gas path

Ambient air — Intake → Compressor — Pressure rise → Combustor and turbine — Fuel to combustor → Nozzle and vanes — Exhaust flow → Force on vehicle — Installed resultant T

Compressor bleed

Bleed thrust loss ΔT

Bleed air — From compressor → Distribution — Controlled bleed → Tip nozzles — Air discharge → Yaw — Equivalent moment

THRUST BALANCE — The installed thrust already includes bleed loss. Internal flow-path forces are counted once.

OPEN · branch mass flow, pressure, temperature and plume interaction with the ground.

Basis · USSR patent SU120735A1 · principle only, installation parameters OPEN

texttocad.org

Forces

TEXTTOCAD TURBOLET R5 / FLIGHT

Flight forces and moments

TURBOLET R5 · illustrative rigid-body simulation

Forces acting on the vehicle

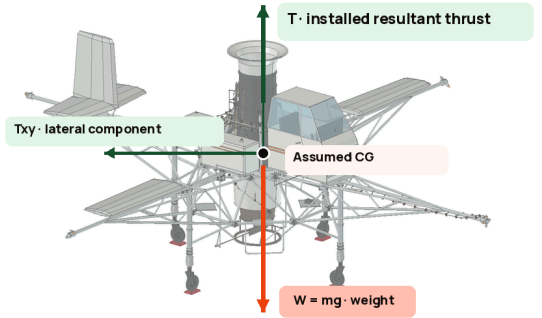

Museum CAD view. Force application points are schematic.

Balance about the CG

$\Sigma F = T + W + F_{ext} + \Sigma N_i$

$\Sigma M = \Sigma(r_i - rCG) \times F_i + M_{eq}$

Right-handed axes. +X toward the cabin, +Y left, +Z up. Forces in N, distances in m, moments in N·m.

2,300 kg → 22.555 kN

Constant scenario mass

N_i are four wheel reactions. F_{ext} covers gust, drag and contact friction. M_{eq} is the equivalent yaw moment.

OPEN · measured CG, inertia and landing-gear response.

Basis · R5 Monino CAD, SHA-256 8dec4fb5…b73 · scenario mass from M5

texttocad.org

The saved DEMO R1 diagrams relate the main flow, bleed air, thrust and support reactions. Branch flow rates and thermal conditions remain OPEN.

Programme costs

DEMO

Region	Prototype and development	Programme operations	Per attempt	Per airborne second
Russia · RUB	49,342,434	10,902,910	1,855,877	231,985
Texas · USD	1,244,251	310,981	44,740	5,592
Germany · EUR	1,112,339	274,992	40,187	5,023

Cost DEMO from 21 November 2026 in local currencies. The per-second cost uses the airborne phase of the cost scenario. Site quotes, labour hours and measured operating expenses remain OPEN.